july 2017 21

idronics™

JOURNAL OF DESIGN INNOVATION FOR HYDRONIC PROFESSIONALS

Recirculating Domestic Hot Water Systems

CALEFFI

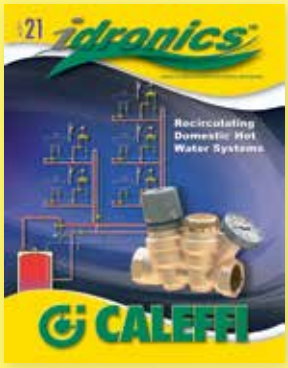

A Technical Journal
from
Caleffi Hydronic Solutions

CALEFFI NORTH AMERICA, INC
3883 W. Milwaukee Rd
Milwaukee, Wisconsin 53208 USA

Tel: 414-238-2360
FAX: 414-238-2366

E-mail: idronics@caleffi.com
Website: www.caleffi.us

To receive future idronics issues
FREE, register online www.caleffi.us

© Copyright 2017
Caleffi North America, Inc.
Printed: Milwaukee, Wisconsin USA

CALEFFI Hydronic Solutions

Caleffi North America, Inc.
3883 W. Milwaukee Rd
Milwaukee, Wisconsin 53208
T: 414.238.2360 F: 414.238.2366

Dear Plumbing and Hydronics Professional,

How often do you turn on faucets, bathtubs or showers, and then wait for warm water to arrive? This is common in many homes and commercial buildings. It results in wasted water, wasted energy and annoyed occupants.

Most people would be surprised to learn that several thousand gallons of heated water is wasted in a typical household, over a year, waiting for water at the desired temperature to arrive at fixtures.

This issue of idronics shows how to avoid this waste and annoyance using recirculating domestic hot water systems. They range from simple “single loop” systems in small buildings, to complex multi-branch systems in larger buildings.

Modern methods and hardware can provide the exact thermal and safety requirements of simple and complex recirculating DHW systems. The pages ahead describe how to size, detail and adjust these state-of-the-art systems.

We hope you enjoy this issue and encourage you to send us any feedback about idronics by e-mailing us at idronics@caleffi.com.

For prior issues please visit us at www.caleffi.us, and click on the idronics icon. There you can download the PDF files. You can also register to receive hard copies of future issues.

Mark Olson

Mark Olson

General Manager & CEO

INDEX

1. INTRODUCTION
2. SINGLE-LOOP RECIRCULATION SYSTEMS
3. MULTIPLE-BRANCH RECIRCULATION SYSTEMS
4. DESIGN OF MULTI-BRANCH RECIRCULATION SYSTEMS
5. ELECTRONICALLY-MANAGED RECIRCULATION SYSTEMS
SUMMARY
APPENDIX A: PIPING SYMBOL LEGEND
APPENDIX B: HEAD LOSS ESTIMATING METHODS

Disclaimer: Caleffi makes no warranty that the information presented in idronics meets the mechanical, electrical or other code requirements applicable within a given jurisdiction. The diagrams presented in idronics are conceptual, and do not represent complete schematics for any specific installation. Local codes may require differences in design, or safety devices relative to those shown in idronics. It is the responsibility of those adapting any information presented in idronics to verify that such adaptations meet or exceed local code requirements.

Mixed Sources
Product group from well-managed forests, controlled sources and recycled wood or fiber
www.fsc.org Cert no. XXX-XXX-XXXX
© 1996 Forest Stewardship Council
FSC
10%

Recirculating Domestic Hot Water Systems

1. INTRODUCTION

All people instinctively desire warm water for washing. Throughout human history that desire has been met in many ways—from iron pots suspended over fires, to modern electronically-controlled tankless water heaters.

idronics 11 provides an overview of the history of domestic water heating.

A reliable source of clean and safe domestic hot water (DHW) is now a requirement in most buildings intended for human occupancy. The importance of domestic hot water in providing comfort, convenience and hygiene cannot be overstated. Delivering it remains one of the most important responsibilities of plumbing system designers.

There are currently many options for *heating* domestic water, using almost any available fuel. Once the water is heated, the building's plumbing system must deliver it to fixtures such as showers, tubs, sinks, dishwashers, clothes washers or other processes requiring hot water.

The ability of different plumbing systems to *deliver* hot water efficiently and safely varies considerably. For example, a bathroom sink located 5 feet from a consistent source of domestic hot water would likely have heated water at an acceptable delivery temperature flowing from its tap within *2 seconds* of opening the faucet. The same fixture located 75 feet from the hot water source may not receive hot water at the same acceptable temperature for 30 seconds or more after the faucet is opened. This delay between opening a faucet and having domestic hot water *at an acceptable temperature* flow from the fixture is undesirable from several standpoints:

First, it's annoying to building occupants. People in most developed countries have become intolerant of waiting for expected results. They are accustomed to instant light at the flip of a switch, instant heat from the burner of a gas stove, and instant operation of an automobile when the key is turned or a button is pushed. It's not surprising they expect instant hot water to flow from a hot water faucet.

Figure 1-1

Second, the cool water that flows down the drain while hot water is making its way from the heat source to the faucet is wasted, as is the heat that this water once contained. Wasted fresh water (hot and cold) has become a major concern in many areas of North America where long-term drought conditions have worsened at the same time as population growth, and thus demand for fresh water, has accelerated.

Studies have shown that the average home wastes more than 3,650 gallons of heated water per year waiting for hot water at the desired temperature to arrive at fixtures.[1] Assuming this wasted water was originally heated from 50 to 120°F using electricity priced at $0.15/kWhr, the wasted energy cost is about $94 per year. This is in addition to the cost of the water itself. Furthermore, some of the heat dissipated from the hot water distribution piping into the building adds to that building's cooling load, resulting in further energy costs.

[1] Klein, Gary. "Hot-Water Distribution Systems Part 1." Plumbing Systems & Design. Mar/Apr 2004.

Beyond the costs of wasted water and energy, it's important to understand that some domestic hot water delivery systems can create conditions that allow pathogens, such as Legionella bacteria, to thrive. These pathogens represent a serious health threat. They are more likely to exist in domestic hot water delivery systems that contain piping where heated water could remain stagnant, in some cases for days. They can also develop in domestic hot water systems that are continually operated at reduced water temperatures—typically less than 140°F at the heat source. These conditions create growth environments favorable to the bacteria. If water containing these pathogens is discharged through fixtures such as showers, the mist created by the shower can be inhaled. This can lead to a serious and even potentially fatal disease. Thus, all domestic hot water delivery systems should be designed to minimize the potential for such pathogens to exist.

One of the best ways to minimize wasted water and energy in domestic hot water delivery systems is by *circulating* hot water through the system at times when it would otherwise not be moving because of no demand at the fixtures. Such systems are called "recirculating" domestic hot water systems. They are the principal focus of this issue of *idronics*.

CONCEPT OF A RECIRCULATING DHW SYSTEM

Figure 1-2 shows a simple trunk and branch plumbing distribution system that supplies hot and cold water to three lavatories and two showers.

Domestic hot water is supplied from a tank-type water heater to the hot water trunk. It flows along the trunk piping and eventually into a "riser" that leads to the fixture with the demand. Once that demand stops, hot water flow also stops in all portions of the system. The water in the trunk and risers cools as heat is dissipated from the piping.

If another demand for DHW occurs within a few minutes, and through the same portion of the distribution system, the water temperature in that piping may have only decreased a few degrees, especially if the piping was well

Figure 1-2

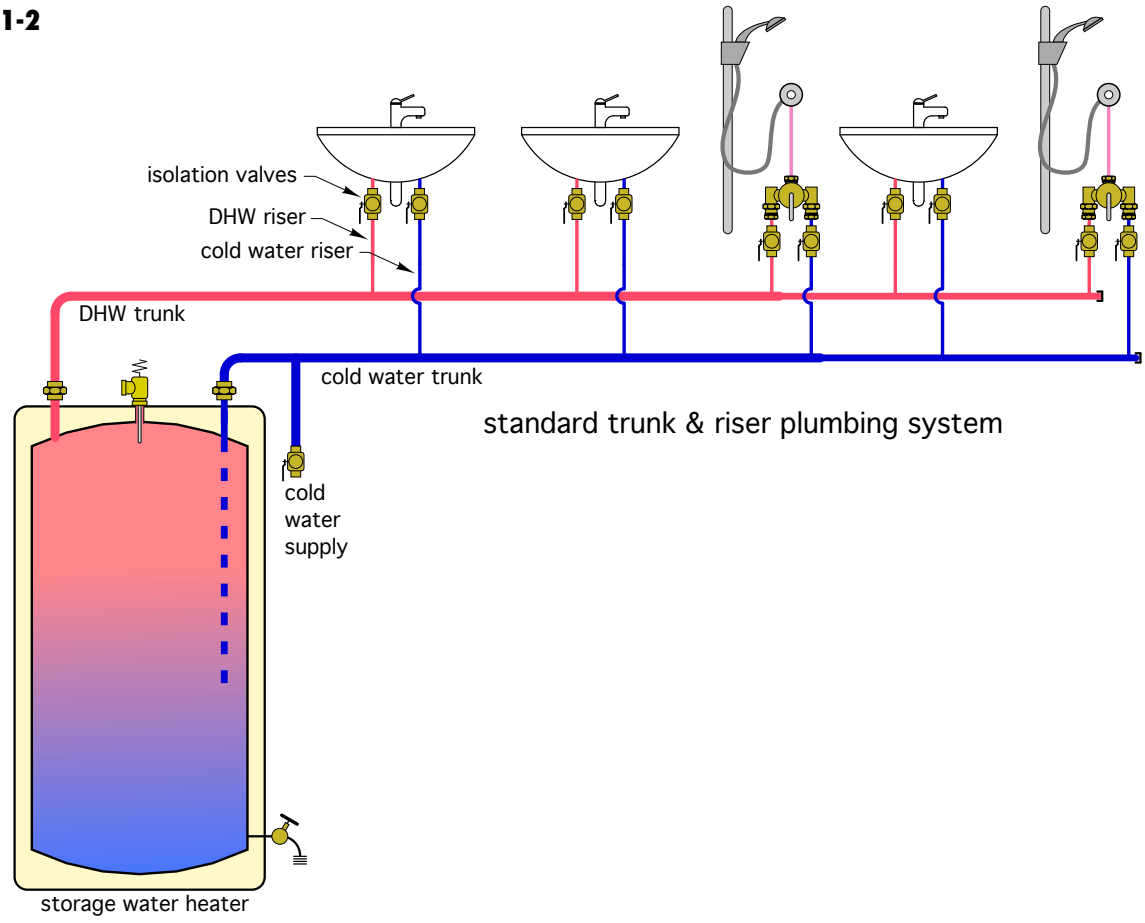

insulated. The temperature at which it emerges from the fixture may be suitable within 3 or 4 seconds of opening the faucet. This scenario is probably acceptable to the person using the fixture.

However, if there is no demand for DHW through the piping for longer periods of time, perhaps an hour, or overnight, the water will have cooled substantially. When a DHW demand occurs, it will take substantially longer—perhaps 30 seconds or more depending on pipe sizes, length of flow path, and air temperature surrounding the piping—before DHW *at the desired temperature* flows from the fixture. This can annoy the person waiting for the anticipated comfort of the hot water at a desirable temperature. It also wastes most of the water between the heat source and fixture.

Figure 1-3 shows how the standard system of Figure 1-2 can be modified to include recirculation.

The system now includes a small recirculation circulator and a pipe that brings hot water not drawn off at a fixture back to the heat source. The hot water piping now forms a complete circuit with the heat source, as compared to the "one-way" path for hot water in the traditional trunk and branch system of Figure 1-2. Each fixture is supplied by a short "riser" pipe from the hot water trunk. This riser should be as short as possible to minimize the water volume not contained within the recirculating circuit.

The end of the hot water supply piping connects to a reduced-size return pipe, which leads back through the circulator to the heat source. A check valve is installed in this return pipe to ensure that cold water cannot flow backward towards the hot water risers.

The size of the return pipe is smaller than the hot water supply pipe. This is possible because the return pipe is *not* responsible for carrying hot water to any fixture. It only has to carry sufficient flow to compensate for the

Figure 1-3

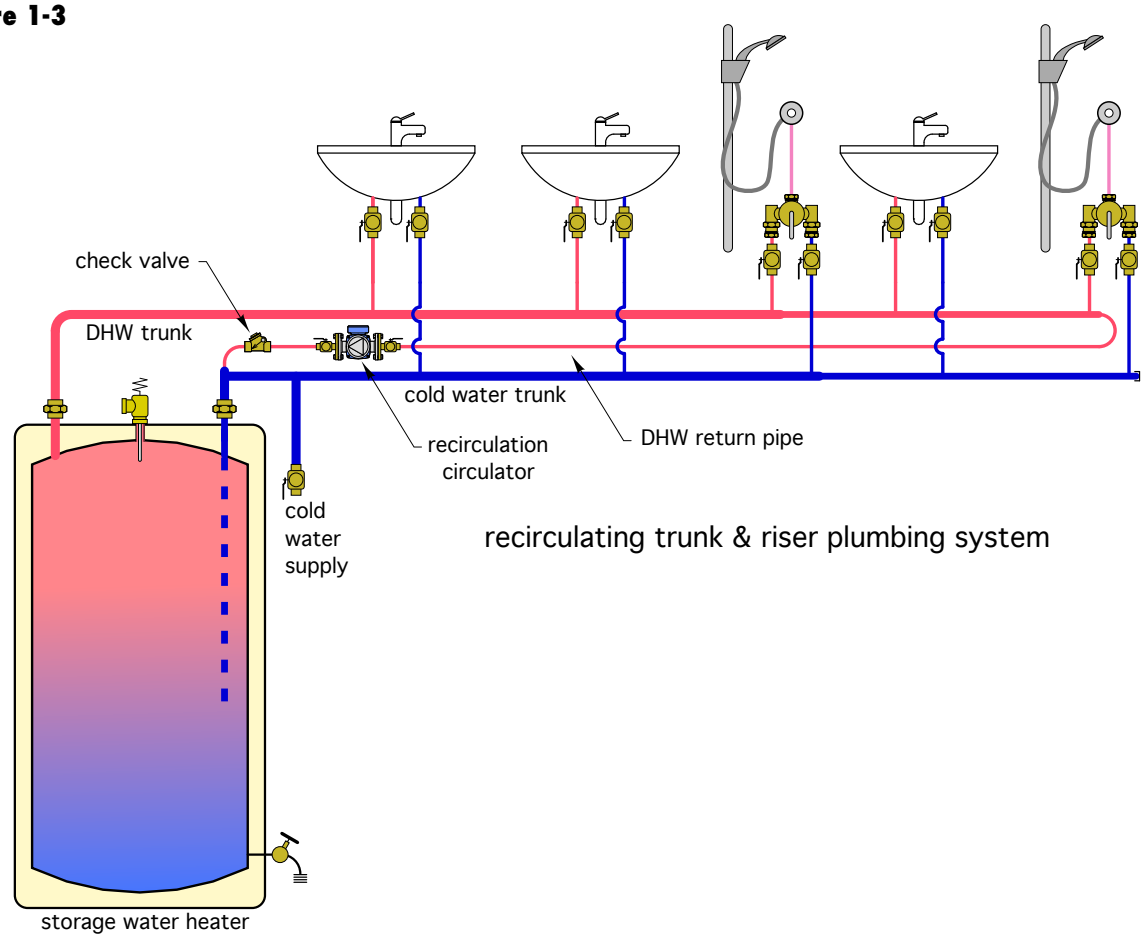

recirculating trunk & riser plumbing system

Figure 1-4

heat loss of the hot water supply piping—a quantity that can be calculated based on information given in a later sections.

The recirculation circulator must be compatible with fresh water. Any wetted components within that circulator must be made of bronze, stainless steel or a suitable engineered polymer. These components must also conform to the no-lead requirement that applies to all domestic water plumbing components within the United States.

In some systems, the recirculation circulator operates continuously (24/7). In other systems, it runs based on a timer with specific user-set on-times and off-times; the off-times typically are overnight hours, or times when the building has little, if any, need for DHW throughout its plumbing system. The circulator might even operate automatically based on "learned" DHW usage patterns that have been sampled over several days. In any case, the objective is to ensure that hot water is immediately available at the fixtures based on some criteria that are acceptable to the building occupants, and if possible, reduce electrical use by turning the circulator off at other times.

The system shown in Figure 1-3 is very simplified. It does not include the components necessary to ensure that domestic hot water at potentially high temperatures doesn't reach the fixtures, nor does it ensure that stable temperatures are maintained within the recirculation circuit. The components and details necessary for these functions are discussed in section 2, as well as in later sections of this issue of *idronics*.

2. SINGLE-LOOP RECIRCULATION SYSTEMS

The fundamental objectives of adding a recirculating function to a domestic hot water delivery system are:

1. To ensure delivery of heated domestic water at all fixtures within 1-3 seconds of opening a faucet, or otherwise creating a demand.

2. To significantly reduce water waste associated with clearing hot water piping of cooler water after a period of no demand.

The basic recirculation system shown in Figure 1-3 could achieve these objectives. However, the plumbing designer also needs to ensure that:

3. The water temperature delivered from any fixture is safe under all conditions.

4. The domestic hot water delivery system does not create conditions favorable to growth of pathogens such as Legionella bacteria.

This section combines all four requirements into systems that are suitable for homes or small commercial buildings where a single-loop recirculating system is feasible. Later sections expand these concepts into more elaborate systems suitable for larger commercial or institutional buildings.

BURN PROTECTION

One of the greatest hazards associated with heated water is the risk of moderate to severe burns when skin is exposed to excessively heated water at sinks, showers, bathtubs or other fixtures.

The ability of hot water to burn human skin depends on its temperature and exposure time. The higher the water temperature, the shorter the time required to produce a burn of a given severity. Figure 2-1 shows how burn severity of adult skin is affected by water temperature and exposure time.

In a shower, adult skin can be exposed to water at 110°F indefinitely without risk of burns. However, at temperatures above 110°F the risk of burns increases rapidly. Water at 120°F will create a first-degree burn to adult skin in approximately 8 minutes. Water at 130°F will cause first-degree burns to adult skin in about

Figure 2-1

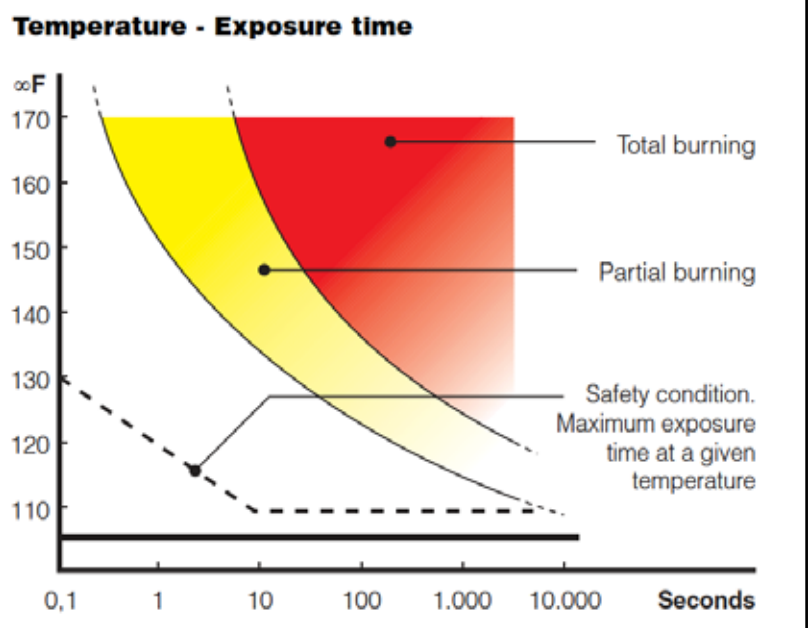

10 seconds. Water at 160ºF will cause a first-degree burn to adult skin in less than 1 second! *Children can experience similar burns in half or less of the time required to burn an adult.* Elderly people are also more susceptible to burns due to reduced nerve sensitively and slower reaction times.

The consequences of serious and possibly irreversible burns caused by overheated domestic water should never be taken lightly. Beyond the potentially life-altering medical issues faced by the victim is the legal liability associated with designing, installing or adjusting the domestic water heating system that caused the burn. It is therefore a highly recommended and often legally *mandated* practice to equip domestic hot water systems with devices that reliably protect against such conditions.

Unless otherwise required by local code or regulation, domestic hot water should never be delivered from fixtures intended to supply water directly to human skin at temperatures above 120ºF. In most cases, water at a temperature of 110ºF is acceptable for showers, bathtubs and lavatories.

Most devices designed to heat domestic water are supplied with thermostatic controls that *should* limit water temperature. The accuracy of these control devices varies considerably. Variations between the temperature setting of the control device and the measured water temperature leaving the water heater can easily be 10ºF or more. This variation could make the difference between an acceptable and safe water temperature at the point-of-use, versus a water temperature that could lead to a serious burn.

Beyond the accuracy and repeatability of the temperature control device on the water heater is the relative ease of adjusting this device. A person who is frustrated with hot water delivery temperatures that are too cool for their comfort may overcorrect by turning the temperature control device up well beyond point of safe delivery temperature.

It's also possible that a hot water system that has to deliver hot water at temperatures as high as 195ºF for sanitation purposes also supplies hot water to a lavatory for handwashing. Without proper anti-scald mixing provisions, it's inevitable that such a situation will eventually cause serious burns.

Another possibility is that the hot water system that normally supplies water at perhaps 120ºF, has been specifically designed to boost the water temperature in the system to 160ºF or higher at certain times to kill pathogens such as Legionella bacteria. During this type of "thermal disinfection" cycle, it's imperative to protect all hot water fixtures in the system from dangerously high delivery temperature.

All these possibilities demonstrate that it's not a good idea, or even legal, to rely on the temperature control device at the water heater to consistently deliver safe hot water temperatures at the points where hot water is drawn from the system (e.g., the "points of use").

POINT-OF-USE TEMPERATURE PROTECTION

One commonly used method of providing "point-of-use" temperature protection is a thermostatic mixing valve conforming to the ASSE (American Society of Sanitary Engineering) 1070 standard. Figure 2-2 shows an example of such a valve installed beneath a lavatory.

Figure 2-2

Figure 2-3

Figure 2-3 shows an ASSE 1070-listed thermostatic mixing valve that is equipped with MPT connections.

Thermostatic mixing valves listed to the ASSE 1070 standard are designed to be installed close to the fixture from which hot water will be drawn. As such, they are called "point-of-use" mixing valves. Caleffi ASSE 1070 mixing valves can be configured with tail pieces to match PEX, MPT threads or soldered connections.

These valves continuously adjust the proportions of entering hot and cold water so that the mixed water stream leaving the valve remains at a set (and safe) temperature. This regulation is created by the movement of a non-electric thermostatic element within the valve, as shown in Figure 2-4.

Figure 2-4

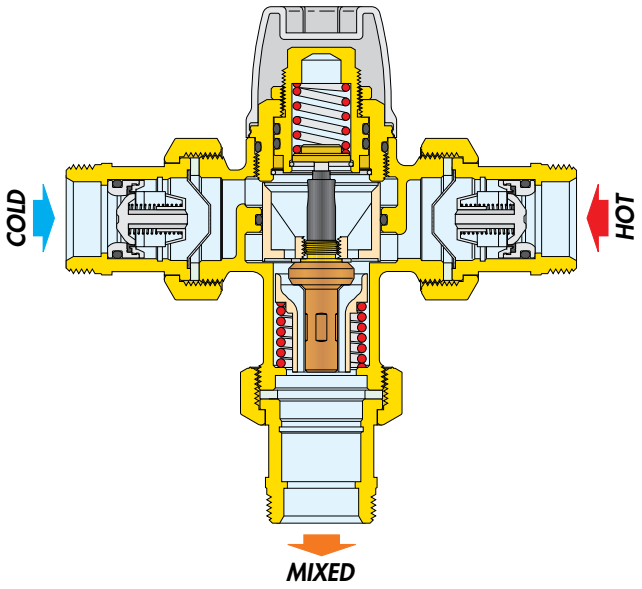

The thermostatic element contains a special wax that expands and contracts with temperature changes. This element is fully immersed in the mixed-flow stream leaving the valve, and thus it continually reacts to changing inlet temperatures and flow rates. The thermostatic element adjusts the open area of the ports that allow hot water and cold water to enter the valve. As the open area of the hot water inlet port decreases, the open area of the cold water inlet passage increases, and vice versa. If the temperature or pressure at either inlet port changes, the valve quickly and automatically compensates to maintain the set outlet temperature.

Thermostatic mixing valves listed under the ASSE 1070 standard are also *pressure* compensated. If cold water flow to the valve is interrupted, the valve must immediately reduce the flow of hot water leaving the valve to a small percentage of normal flow. This action requires a minimum temperature difference of 18°F (10°C) between the hot water inlet and mixed water outlet. Valves listed to the ASSE 1070 standard must also have internal check valves in both inlet ports.

Figure 2-5 shows how the basic recirculation system of Figure 1-3 can be modified to include an ASSE 1070-listed thermostatic mixing valve at each fixture.

Figure 2-5

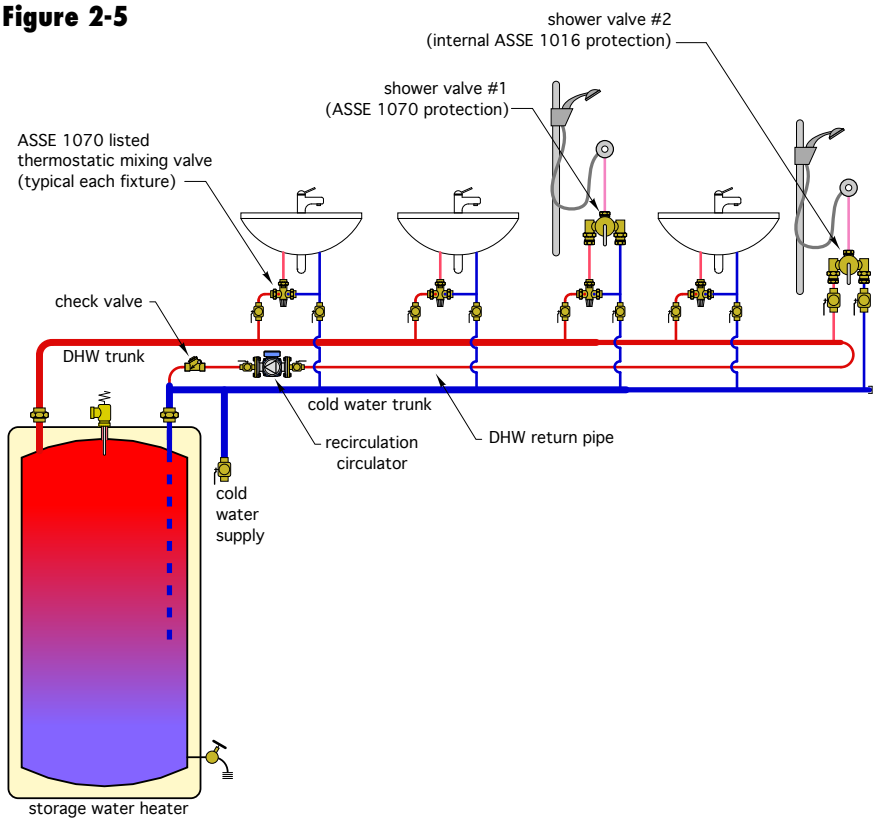

Shower valve #2 in Figure 2-5 is assumed to contain an *internal thermostatic and pressure-compensated* assembly that provides protection based on the ASSE 1016 standard, and thus no external mixing valve is needed. Many shower valves now have this capability. However, older shower valves may not have any temperature or pressure compensation. Shower valve #1 in Figure 2-5 is assumed to be such a valve. As such, an external ASSE 1070 thermostatic mixing valve has been installed.

The benefits of having an ASSE 1070 thermostatic mixing valve at each fixture include:

1. The maximum supply water temperature can be independently adjusted at each fixture. This is especially useful in systems that supply hot water for washing or sterilization at temperatures well above 120°F, but also supply hot water to lavatories, sinks or showers where skin contact occurs.

2. The water heater, hot water trunk and recirculation return piping can operate continuously, or based on other specific conditions, at temperatures high enough to kill pathogens such as Legionella bacteria.

POINT-OF-DISTRIBUTION TEMPERATURE PROTECTION

When all fixtures served by the system require the same maximum hot water temperature, and the heat source will be operated at higher temperature to eliminate pathogens, a single "point-of-distribution" thermostatic mixing valve with an ASSE 1017 listing can be used, as shown in Figure 2-6.

In any recirculating hot water distribution system, there will be times when the circulator is operating but no hot water is being drawn at the fixtures. Under this condition, heat continually dissipates from the piping forming the recirculation loop. If the loop is relatively short and well insulated, the rate of heat loss should be very small. If the loop is long and uninsulated, the rate of heat loss could be substantially higher.

To maintain the recirculating hot water at the desired delivery temperature, the heat lost from the loop must be replaced. This requires some water flow between the loop and the hot water source.

In systems with point-of-distribution mixing valves that *do not fully close their ports*, the rate of heat transfer between the heat source and recirculation loop can be stabilized by installing and adjusting two valves. In Figure 2-6, these valves are identified as the "bridge valve" and "return valve".

When there is no demand for hot water at the fixtures, the flow of return water in the recirculating loop will equal the rate of hot water flow from the tank to the inlet port of the mixing valve. *This flow rate should be adjusted so that the rate of heat transfer from the tank to the recirculating loop exactly balances the rate of heat loss from the recirculating loop.* This allows the water temperature leaving the temperature-activated mixing valve to remain stable.

The bridge valve, and possibly the return valve, must be adjusted *when there is no domestic water draw on the recirculating loop (e.g., all fixtures are off).*

Figure 2-6

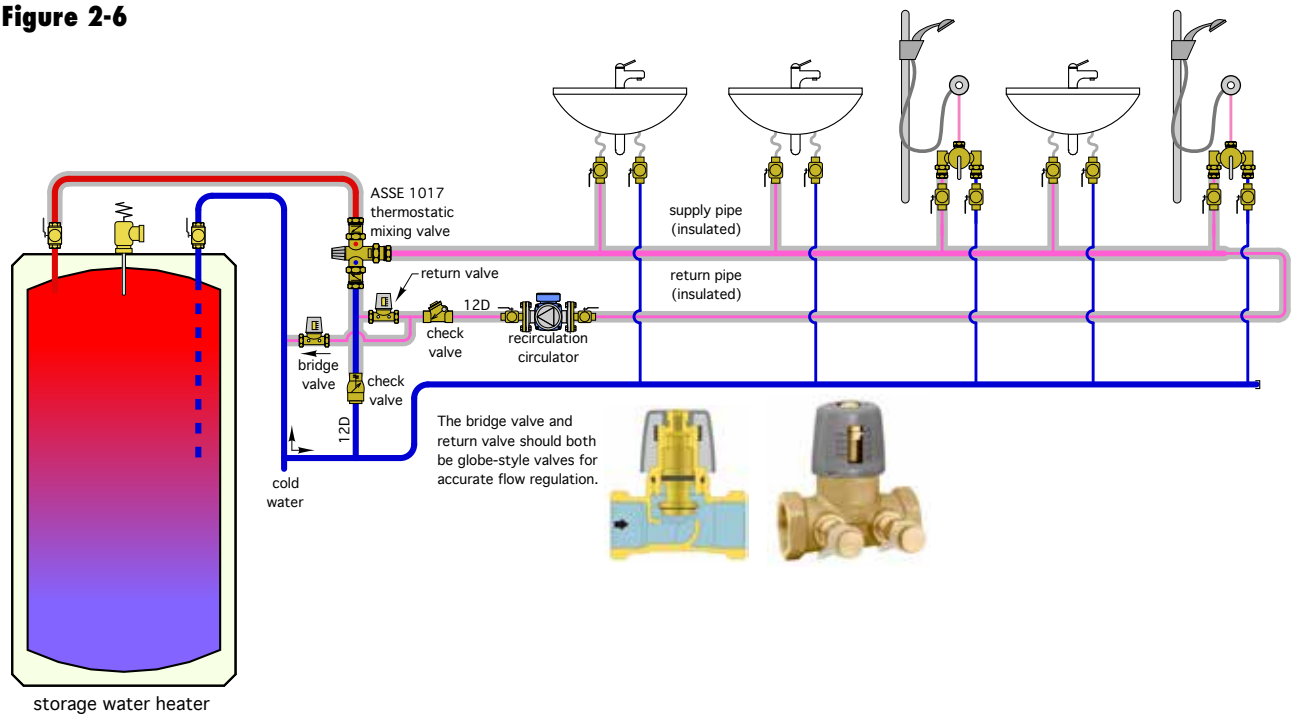

Begin with the bridge valve fully *closed* and the return valve fully *open*. Turn on the recirculating circulator and let it run for several minutes. Under this condition, the supply water temperature leaving the point-of-distribution mixing valve will likely be *lower* than the setting of the valve (since there is no flow returning to the water heater).

Slowly open the bridge valve and monitor the temperature leaving the point-of-distribution mixing valve. It will begin rising as some water returns to the water heater and an equal flow of hot water moves from the water heater to the hot port of the mixing valve. When the temperature leaving the mixing valve remains stable and is at or very close to the temperature set on the point-of-distribution mixing valve, the bridge valve is correctly set.

The return valve can remain fully open unless a situation occurs where the bridge valve is fully *open*, but the temperature leaving the mixing valve is still too low. If this occurs, partially close the return valve to add flow resistance. This forces more flow through the bridge valve. Repeat the previously described procedure of slowly opening the bridge valve until the water temperature leaving the mixing valve is stable.

In Figure 2-6 the hot water supply and return (recirculation) piping are shown with insulation. This significantly reduces

Figure 2-7

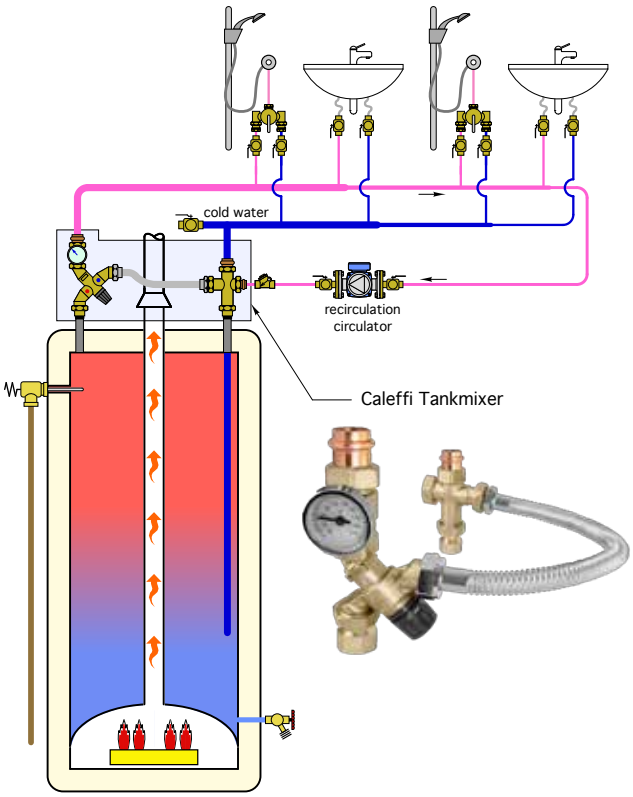

heat loss, which decreases the required recirculation flow rate. Designers should check with local plumbing codes to verify any minimum insulation requirements for domestic hot water piping.

In systems where the point-of-distribution valve can fully close its ports, the bridge valve and return valve can be eliminated. Figure 2-7 shows an example of such a system using Caleffi's TankMixer assembly, which meets ASSE 1017 protection standards and can fully close its hot port when necessary, thus eliminating the need for a bridge valve or a return valve.

The Caleffi TankMixer assembly provides all hardware necessary for point-of-distribution temperature protection, as well as recirculation. It is available with threaded, sweat and press fit connections. The latter, as shown in Figure 2-7, allows the complete assembly to be installed without any soldered joints.

Designers should also note that use of a single thermostatically actuated point-of-distribution ASSE 1017 mixing valve that is set no higher than 120ºF does *not* protect the hot water distribution system from Legionella. Such protection requires higher water temperatures, which are discussed next.

LEGIONELLA PROTECTION

One biological impurity that can be present in domestic hot water systems is Legionella bacteria. There are currently over 40 known types of these bacteria, which are naturally present in rivers, lakes, wells or stagnant pools of water. These bacteria are also found in municipal water mains and can, to some extent, survive municipal water treatment processes.

Legionella bacteria can multiply in water at temperatures between 68 and 122ºF. Below 68ºF, the bacteria are present, but remain dormant. Tempered water between 77 and 113ºF provides an *optimum* growth environment for Legionella bacteria. Growth is also aided by the presence of biofilms, mineral scale, sediment or other microorganisms within plumbing systems. Dead-leg plumbing systems that harbor stagnant water also provide an enhanced growth environment and should be avoided.

Figure 2-8 shows the relationship between the status of Legionella bacteria and the temperature of the water in which they exist. Legionella bacteria can be rapidly killed by maintaining heated domestic water at 140ºF or higher.

Figure 2-8

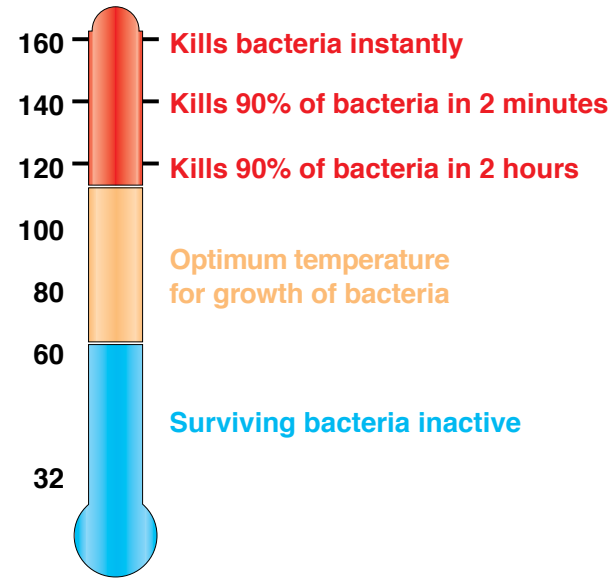

Domestic hot water systems that maintain the heat source and distribution piping, including the return piping in a recirculating system at temperatures of 130ºF or higher, provide excellent protection against Legionella bacteria.

Some systems maintain these high water temperatures continuously. Other systems operate with a timed sterilization cycle in which the water temperature is elevated to 160ºF or higher and circulated through the entire recirculation system for a specific time. This sterilization cycle is typically activated at a time of reduced water usage, such as during nighttime hours in a residential system.

In the absence of specific codes or standards that require otherwise, the following water temperatures and associated cycle durations have been commonly used for once-per-day sterilization of domestic hot water delivery systems:

158ºF (70ºC) for 10 minutes
149ºF (65ºC) for 15 minutes
140ºF (60ºC) for 30 minutes

These temperatures and durations would be required at the hot water fixture farthest away from the hot water source.

During the sterilization cycle, it is essential to protect fixtures against scalding hot water. Use of ASSE 1070 point-of-use mixing valves, as shown in Figure 2-5, can provide this protection.

Figure 2-9

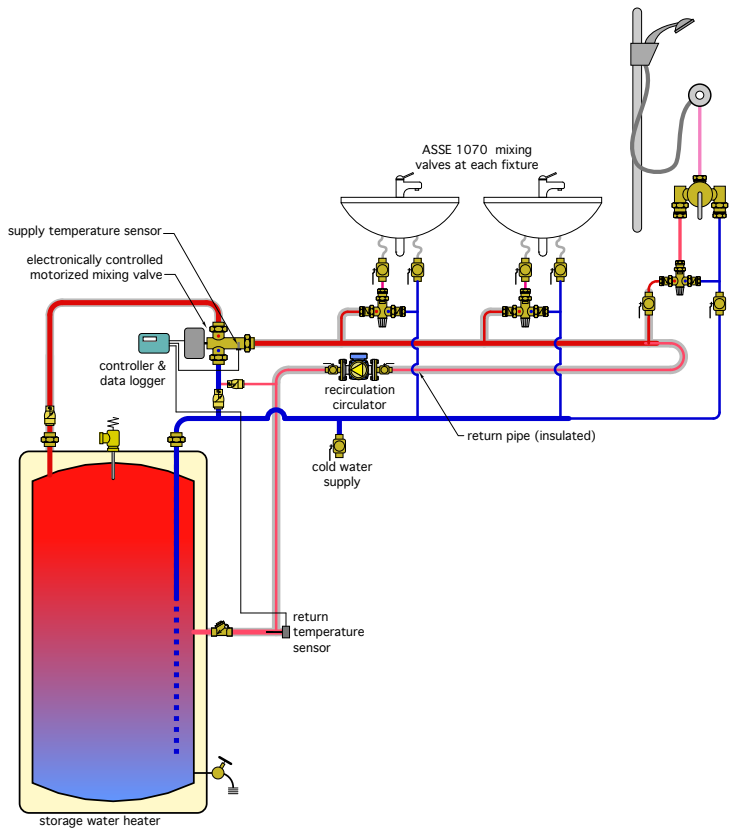

If a sterilization cycle is required, it is not possible to use a *thermostatic* point-of-distribution mixing valve, as shown in Figure 2-6. However, *electronically-controlled* mixing valves, in combination with proper controls, can allow for sterilization cycles in a recirculating system and provide reduced hot water temperatures at other times. Reducing the water temperature circulating through the system during non-sterilization periods reduces piping heat loss, and thus reduces fuel use.

Figure 2-9 shows the concept of a recirculating domestic hot water system using an electronically-controlled point-of-distribution mixing valve in combination with ASSE 1070-rated point-of-use thermostatic mixing valves at each fixture. The latter protect the fixtures from the high-temperature water circulated through the system during the sterilization cycle.

DESIGNING A SINGLE-LOOP RECIRCULATION SYSTEM

When hot water leaves a heat source and travels along piping, its temperature is continually decreasing due to heat loss from that piping. The farther the water travels along the piping, the lower its temperature becomes. In some systems, the temperature drop is quite small, perhaps only 1 or 2ºF due to short piping lengths and insulation around the piping. In systems with long runs of uninsulated piping carrying relatively high temperature water, the temperature drop can be substantial. This can lead to water temperatures at the farthest fixture that are either too low from a comfort standpoint or too low based on protection against Legionella growth. Thus, the piping path between the heat source and the farthest fixture requiring hot water becomes the focus.

The objective of a single-loop recirculation system is to establish a flow rate than can maintain a specific minimum supply water temperature at the fixture farthest from the heat source.

Meeting this objective requires a means to evaluate piping heat loss. That loss depends on the type of piping material(s) used, the pipe size and length, the water temperature inside the piping, the presence or absence of pipe insulation, and the air temperature surrounding the piping.

Figure 2-10a can be used to estimate the rate of heat loss from *bare copper water tubing* based on the difference in temperature between the water in the tube and the surrounding air temperature. Figure 2-10b can be used to estimate the heat loss from copper tubing wrapped with 1/2" thick elastomeric foam insulation, having an R-value of approximately 2 ºF•hr•ft^2/Btu.

To use the graphs in Figures 2-10a and 2-10b, subtract the air temperature surrounding the tube from the *average* water temperature inside the tube. Find this temperature *difference* on the horizontal axis. Draw a line up from the temperature difference to the sloping line corresponding to the tube size. Then draw a horizontal line from this point to the vertical axis, and read the heat loss *per foot* of tube from the vertical axis.

For example: Assume that a 1" *bare* copper tube carries water at an average temperature of 120ºF for a distance of 50 feet through a space where the air temperature is 55ºF. Estimate the total rate of heat loss from this tube.

Figure 2-10a

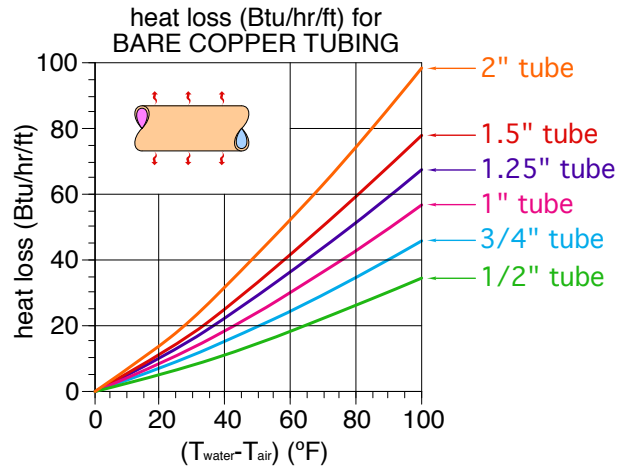

Figure 2-10b

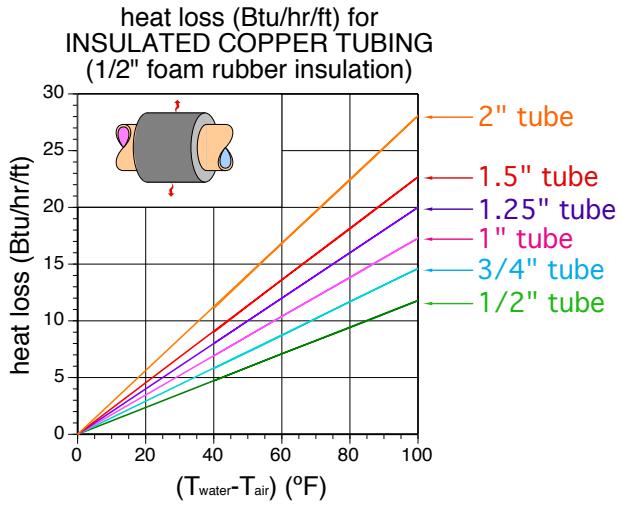

Solution: Since this involves bare copper tubing, use Figure 2-10a. The difference between the average water temperature and surrounding air temperature is (120 - 55) = 65ºF. Draw a line from 65ºF on the horizontal axis up to the curve for 1" tubing, and then a horizontal line over to the vertical axis. The rate of heat loss is about 33 Btu/hr *per foot* of tubing. The total heat loss from the 50-foot pipe is therefore about 33 x 50 = 1,650 Btu/hr.

By comparison, Figure 2-10b shows that heat loss from 1" copper piping wrapped with 1/2" thick elastomeric foam insulation is about 11.2 Btu/hr per foot, *approximately one-third that of the uninsulated copper tube.*

All heat lost from hot water distribution piping is undesirable from several standpoints:

• When the water in the pipe has cooled for several hours, it will be close to the surrounding air temperature. This cool water will likely be sent down the drain by a person who *wants* hot water for washing or other purposes. Significant quantities of water, as well as the energy to heat it, are lost each time this occurs.

• Waiting for hot water to flow from the fixture is annoying, especially in buildings with long "dead end" piping systems, where wait times can exceed 2 minutes. These wait times are often longest in the early morning following a period when little if any hot water has passed through the dead-end piping.

• Heat escaping from hot water piping adds to the building cooling load. The greater the cooling load, the greater the cost of operating the cooling system.

• Warm water standing in piping improves the growth environment for any Legionella bacteria.

RECIRCULATION FLOW RATE

The goal of a recirculating hot water distribution system is to keep the water temperature at the farthest fixture at a specified minimum value.

The temperature drop along the supply pipe can be estimated based on the size and length of piping in the loop, as well as the average water temperature, surrounding air temperature and the effect of any insulation on the pipe.

The ASPE Domestic Water Heating Design manual, 2nd Edition, suggests a temperature drop of 5 to 10ºF between the hot water source to the farthest fixture served. Piping representing this path is shown in red in Figure 2-11.

Larger allowed temperature drops are possible and will decrease the recirculation flow rate, but they may result in water that is below an acceptable supply temperature at the farthest fixture.

Assuming that each fixture in the system is protected by an ASSE 1070 thermostatic mixing valve, or that the fixture has internal ASSE 1016 protection, a suggested minimum hot water temperature at the farthest fixture is 130ºF.

Figure 2-11

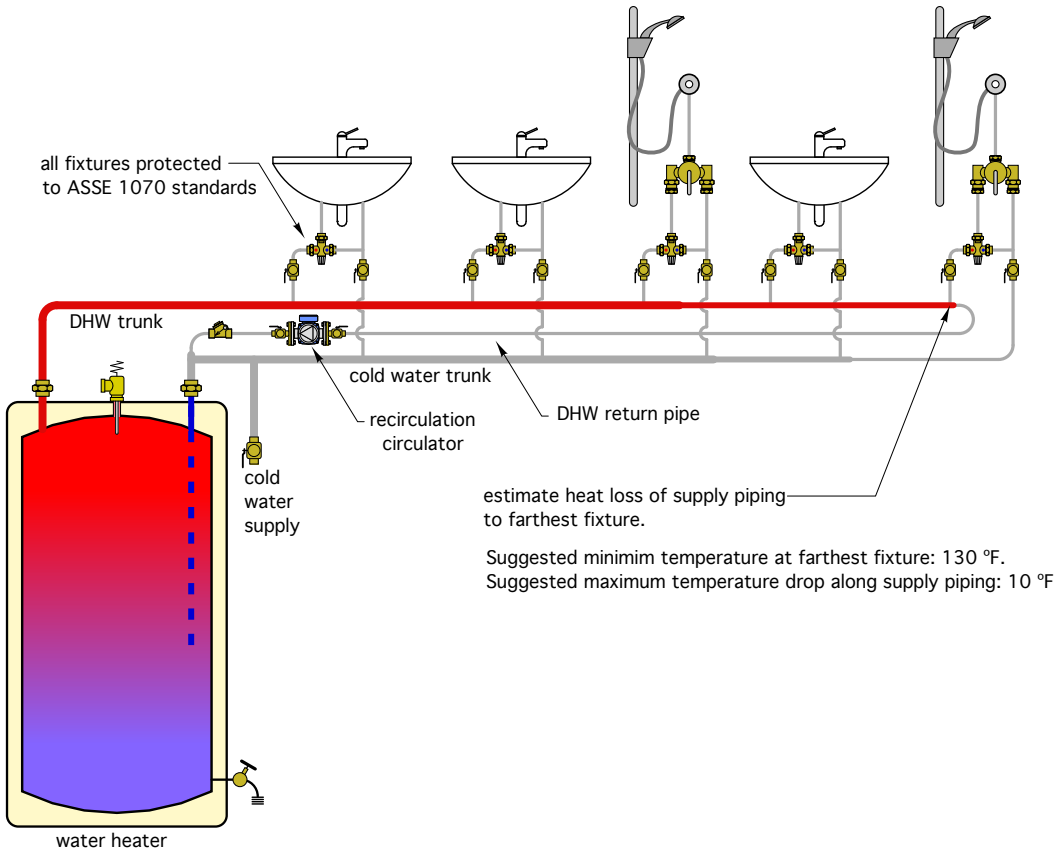

Formula 2-1 can be used to estimate the necessary recirculation flow rate based on the heat loss of the supply piping and the allowed temperature drop.

Formula 2-1:

$$f_r = \frac{Q}{500 \times \Delta T}$$

Where:

f_r = the required recirculation flow rate (gpm)

Q = total heat loss of the DHW supply piping (Btu/hr)

ΔT = the allowed temperature drop (°F).

For example: Assume the domestic hot water piping from a heat source to the farthest fixture is 100 feet of 1" *bare* copper tubing. Water enters the piping at 135°F, and the allowed temperature drop to the farthest fixture is 5°F. The air temperature surrounding the piping is 70°F. Determine the required recirculation flow rate.

Solution: Figure 2-10a can be used to estimate the heat loss of this piping. Since the supply temperature is 135°F, and the allowable temperature drop is 5°F, the *average* water temperature in the supply piping is 135 - 5/2 = 132.5°F. The difference between this average water temperature and the air temperature surrounding the piping is 132.5 - 70 = 62.5°F. Using Figure 2-10a, the estimated heat loss of the 1" bare copper piping is 32 Btu/hr/ft. Thus, the total estimated heat loss of the supply piping is:

$$Q = \left(32 \frac{Btu}{hr \cdot ft}\right)(100\,ft) = 3200 \frac{Btu}{hr}$$

The recirculation flow rate can now be determined using Formula 2-1:

$$f = \left(\frac{Q}{500 \times \Delta T}\right) = \left(\frac{3200}{500 \times 5}\right) = 1.28\,gpm$$

This low flow rate is easily handled by a 1/2" tube for the recirculation piping.

HEAD LOSS OF THE RECIRCULATION CIRCUIT

Once the recirculation flow rate is determined, the head loss of the *complete recirculation loop* (e.g., supply piping and return piping) needs to be estimated. The methods and data in Appendix B can be used to estimate this head loss.

For example, assume the supply piping to the farthest fixture is 100 feet of 1" bare copper tubing, and the return piping is 100 feet of 1/2" bare copper tubing.

Using the formulas in Appendix B, the estimated head loss from 100 feet of 1" copper carrying water at 1.28 gpm, and at an average temperature of 132.5ºF is 0.131 feet.

$$H_L = (acl)f^{1.75} = (0.048 \times 0.01776 \times 100)(1.28)^{1.75} = 0.131\,ft$$

The estimated head loss from 100 feet of 1/2" copper at 1.28 gpm, and at an average temperature of 132.5ºF is 2.47 feet.

$$H_L = (acl)f^{1.75} = (0.048 \times 0.33352 \times 100)(1.28)^{1.75} = 2.47\,ft$$

The *total* estimated head loss of the *straight piping* in the circuit is thus (0.131 + 2.47) = 2.6 feet.

This head loss will be increased by 10% to include an allowance for head loss of fittings.

2.6 x 1.1 = 2.86 feet

Thus, the total recirculation pumping requirement is 1.28 gpm at 2.86 feet.

This is a very small pumping requirement that can be handled by a small circulator designed specifically for recirculation systems. Such circulators typically operate with electrical inputs of 10 to 40 watts, and thus consume very little electrical energy.

An example of a circulator specifically designed for domestic water recirculation is shown in Figure 2-12. This speed of this circulator can be manually adjusted to the flow and head requirements of the recirculation loop. This circulator also includes a manually adjusted timer that can be used to select when it should operate during a 24-hour day.

Figure 2-12

Courtesy of Xylem.

Some DHW recirculation circulators are equipped with electronics that *learn* household hot water usage patterns over time. This information is used to turn the circulator on and off to match hot water usage patterns. The goal is to minimize thermal and electrical energy usage while also delivering reliable and nearly instant hot water at fixtures when it's needed.

3. MULTIPLE-BRANCH RECIRCULATION SYSTEMS

Many DHW delivery systems in larger buildings have multiple branches. A common piping layout uses hot and cold water "trunk" piping that serves multiple "branches." Each branch serves multiple groups of fixtures. Figure 3-1 shows an example of such a system.

The number of fixtures or fixture groups connected to each branch can be different, as can the distance from the hot water source to where each branch connects to the supply trunk.

Each branch has a recirculation return pipe that tees into a return "trunk." Flow through the recirculation system is provided by a single circulator.

Each branch recirculation pipe is equipped with a check valve. This valve is necessary to prevent flow reversal in the recirculation piping, which could otherwise be caused by sporadic pressure differential in the system due to DHW draws at certain fixtures.

When there is no demand for domestic hot water at the fixtures, this system is very similar to a hydronic heating or cooling distribution system with multiple branches and a single circulator. The *initial* (unbalanced) recirculation flow rates through each branch will depend on the pipe sizes, pipe lengths, fittings and distances from the circulator to the points where each branch connects to the hot water supply trunk and the recirculation return trunk.

Branches that are relatively close to the circulator and/or have shorter lengths of piping will have higher recirculation flow rates compared to branches that are farther from the circulator and/or have longer piping lengths. These initial branch recirculation flow rates may be much higher or lower than ideal. Branches with low recirculation rates could fail to provide adequate hot water supply temperature at the farthest fixtures. Branches with excessively high recirculation rates waste the head energy provided by the recirculation circulator.

Figure 3-1

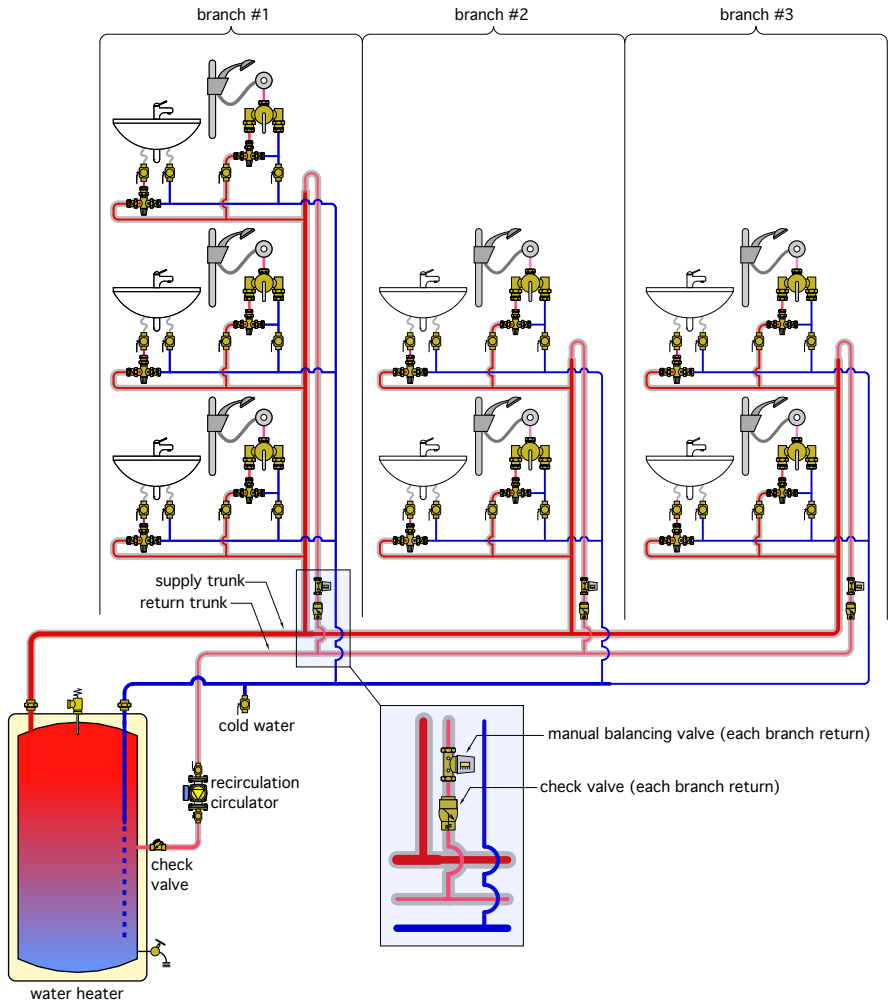

As is true with hydronic heating and cooling systems, multi-branch domestic hot water recirculation systems require *balancing* to achieve optimal performance.

The system in Figure 3-1 shows a manually-adjusted balancing valve just upstream of where each recirculation return pipe enters the recirculation trunk pipe. These valves could also be installed at other locations on the recirculation return piping, provided those locations are easily accessible.

Manually-adjusted or dynamic balancing valves could be one of several options including:

Figure 3-2a

Figure 3-2b

Figure 3-2c

Figure 3-2d

a. fixed orifice manually-adjustable balancing valves with pressure ports

b. variable orifice manually-adjustable balancing valves with pressure ports

c. dynamic valves configured to maintain a specific and fixed flow rate

d. manually-adjustable balancing valves with integral flow meters

Examples of these valve options are shown in Figure 3-2.

Caleffi fixed-orifice balancing valves (Figure 3-2a) and variable-orifice balancing valves (Figure 3-2b) allow precise adjustment of pressure drop across the valve. However, *they do not directly indicate the flow rate passing through them.* Instead, they rely on the use of a manometer for inferring flow rate based on a measured pressure drop. Figure 3-3 shows an example of a digital manometer connected to a balancing valve.

Figure 3-3

Some modern "digital" manometers can mathematically convert from the measured pressure drop across a specific valve to the inferred flow rate through that valve. Older manometers just indicate a differential pressure reading. The person setting the valve must then refer to a chart or slide rule to convert the measured pressure drop into an inferred flow rate.

Manually-adjustable balancing valves with fixed or variable orifices and pressure ports provide a relatively low-cost option for balancing. However, they also require the person doing the balancing to *attach the manometer to each valve every time a flow reading is needed.*

Furthermore, adjusting the flow rate through one manually-adjustable valve in a multi-branch system changes the

Figure 3-4

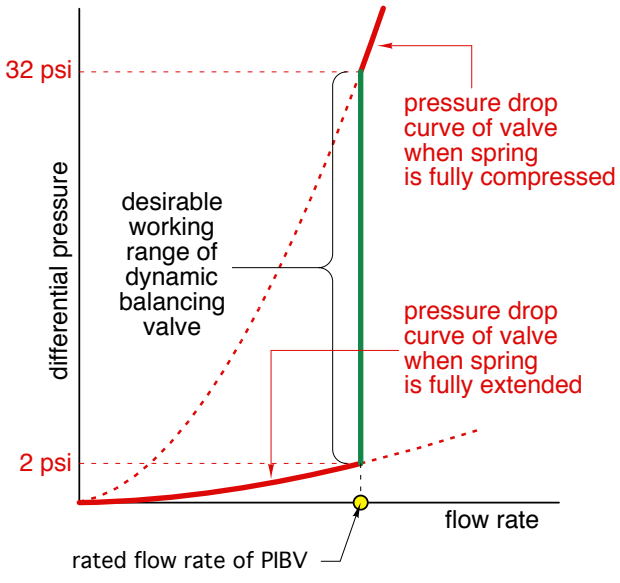

flow rates through the other branches. Because of this, *it's often necessary to iteratively adjust each valve several times to achieve the target flow rate through each branch of the system.*

Dynamic pre-set valves, such as the Caleffi FlowCal valve shown in Figure 3-2c, are provided with a calibrated flow rate setting, such as 0.5 gpm. A spring-loaded mechanism within the valve modulates as the differential pressure across the valve varies within a control range such as 2-14 psi or 2-32 psi. This allows the valve to maintain its pre-set flow rate as long as the differential pressure across the valve stays within its control range, as shown in Figure 3-4.

Balancing valves with integral flow meters, such as the Caleffi QuickSetter shown in Figure 3-2d, eliminate the need for a manometer. The flow rate through the valve can be read directly on the valve by pulling the spring-loaded pin, as seen in Figure 3-5. This allows a magnet within the valve to position the flow indicator along the flow rate scale. The valve can then be set to the desired flow rate, and the pin released. The QuickSetter can accurately measure flow rate *regardless of the orientation in which it's installed*.

Figure 3-5

No water passes directly by the QuickSetter's flow indicator, eliminating concerns about scaling or dirt deposits on the indictor as the valve ages. QuickSetter valves are available in lead-free brass and with an optional thermometer, as seen in Figure 3-5.

Manually-adjustable balancing valves have been the "traditional" hardware used for balancing hydronic heating and cooling systems, as well as domestic hot water recirculating systems. However, there are significant differences between the *objectives* of balancing a hydronic system heating or cooling system versus a domestic hot water recirculating system.

In a multi-branch hydronic system, balancing procedures assume that stable flow is needed through *all* branches when that system operates under design load conditions. This is necessary to provide adequate heat output from all heat emitters. During partial load conditions, and in systems equipped with pressure-independent balancing valves, stable flow is to be maintained in all operating branches regardless of which other branches are off.

In a domestic hot water recirculating system, the objectives of balancing are:

1. Provide a minimum hot water temperature to the farthest fixtures in all branches of the system.

2. Prevent stagnant water within any part of the system that has little or no demand for hot water.

In a multi-branch DHW delivery system, there will be times of adequate DHW flow to the farthest fixture in each branch due to usage. Under such conditions, there is no need for recirculation flow.

At other times, there could be hours, even days, when there is no DHW demand from the farthest fixture, and thus recirculation flow is necessary to avoid a lengthy delay of DHW delivery when a demand does occur, as well as to avoid potential growth of pathogens due to stagnant water in that portion of the system.

The variability of these operating conditions, as well as the need to protect against biological growth, requires a different criterion for optimal balancing of a DHW recirculation system. *That criterion is based on maintaining a minimum DHW temperature at the farthest fixture on each branch of the system, rather than maintaining a specific flow rate through each branch.* If that minimum temperature results from a draw of DHW from the farthest fixture, there is no need for recirculation flow in that portion of the system. However, for optimal results, the system must automatically detect when a draw of DHW has *not* occurred within any branch of the system and initiate recirculation to ensure adequate temperature at the farthest fixture.

Maintaining recirculation in any portion of a DHW recirculation system that doesn't need it wastes a portion of the head energy imparted to the water by the recirculation circulator, and thus wastes some of the electrical energy supplied to that circulator. Although one might argue that such energy waste is relatively small in a residential system, it can be very significant in large DHW recirculation systems serving hundreds, and in some buildings *thousands,* of fixtures.

Thus, optimal balancing of a recirculating DHW delivery system requires devices that can sense and react to the water temperature at the farthest fixture in each branch of the system. When a predetermined and sufficient hot water temperature is present at the farthest fixture, the only recirculation flow necessary is that required to continually monitor the hot water temperature at the farthest fixture If the predetermined and sufficient water temperature is *not* present at the farthest fixture, the balancing device must react by allowing increased recirculation flow to restore that temperature.

Figure 3-6

THERMAL BALANCING

Caleffi has developed a unique product to address the specific balancing needs of a recirculating DHW distribution system. It's called a ThermoSetter™ valve. One configuration of that valve is shown in Figure 3-6.

ThermoSetter™ valves are designed to be installed on the return piping of each recirculation branch as shown in Figure 3-7.

The basic configuration of the ThermoSetter™ valve provides a non-electric thermostatic balancing element similar to that used in ASSE 1017 mixing valves. This balancing element expands and contracts in response to the temperature of the water entering the valve. It allows full flow through the valve until the entering water temperature reaches a user set value between 95 and 140ºF, which implies there is hot water at that temperature throughout the hot water supply piping of that branch. When this temperature setting is reached, the balancing element reduces recirculation flow to a minimum value sufficient to monitor the entering water temperature and to ensure that the recirculating circulator is not "dead-headed." If the water temperature entering

Figure 3-7

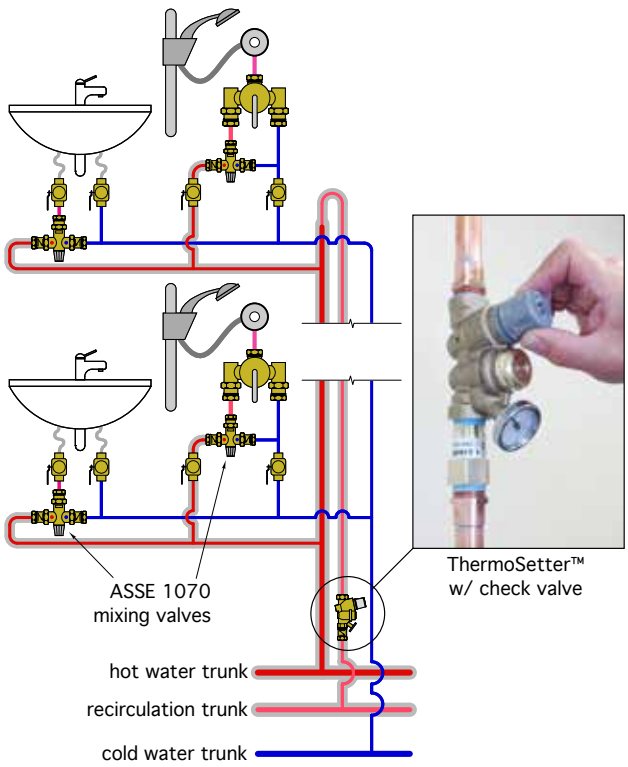

the ThermoSetter™ valve then decreases, as would occur with little or no hot water demand in the branch hot water piping over time, the balancing element opens to allow more domestic hot water flow through that branch. *This action ensures adequate (but not excessive) DHW circulation in each branch of the system.*

Figure 3-8 shows a cross section of the basic ThermoSetter™ valve, along with the flow path through the valve when the balancing element allows maximum flow. When operating in this mode, the valve's Cv value is 2.1 (e.g., a flow rate of 2.1 gpm of water creates a 1 psi pressure drop across the valve).

Figure 3-8

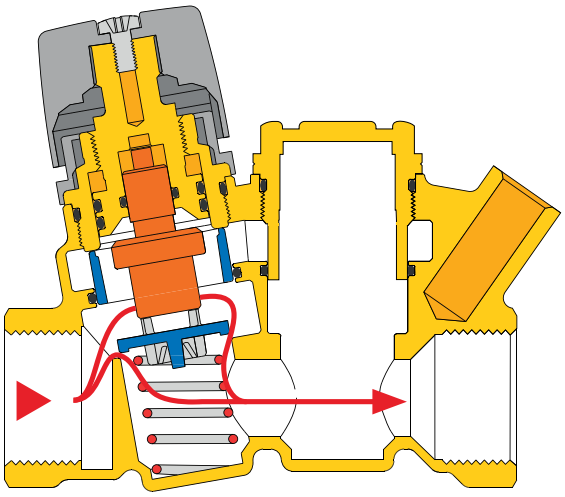

Figure 3-9

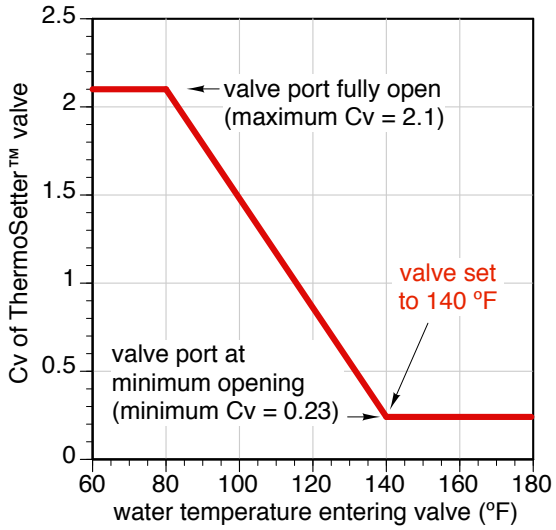

Figure 3-9 shows how the Cv value of the ThermoSetter™ valve changes based on entering water temperature, and for a valve that has been set for 140°F.

At entering water temperatures of approximately 80°F or less, the flow passage through the ThermoSetter™ is fully open, and the valve operates at its maximum Cv of 2.1. If the water entering the valve increases above 80°F, the thermostatic element within the valve begins to reduce the flow passage, causing the valve's Cv to decrease. If the entering water temperature climbs to 140°F or higher, the flow passage reaches its minimum opening position, and the valve operates at its minimum Cv of 0.23. This allows minimal but sufficient hot water flow through the valve to ensure it can continuously sense entering water temperature.

If the valve's knob is rotated to a lower setting, the sloping portion of the red line seen in Figure 3-9 slides to the left, as shown in Figure 3-10, where the valve's setting is now 120°F.

Figure 3-10

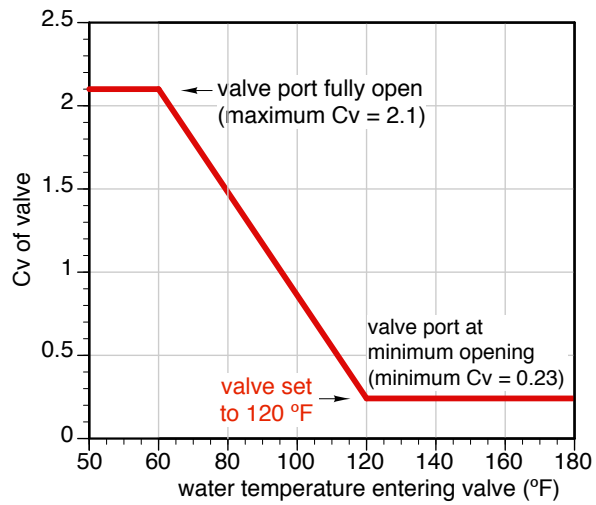

The valve maintains the same maximum and minimum Cv values, and the same nominal 60°F proportional range between these Cv values. The only change is the temperature at which the minimum Cv is achieved.

Figure 3-11 shows the basic ThermoSetter valve with the optional check valve assembly installed on the outlet side.

The check valve prevents flow reversal through the recirculation piping in a multi-branch DHW distribution

Figure 3-11a

Figure 3-11b

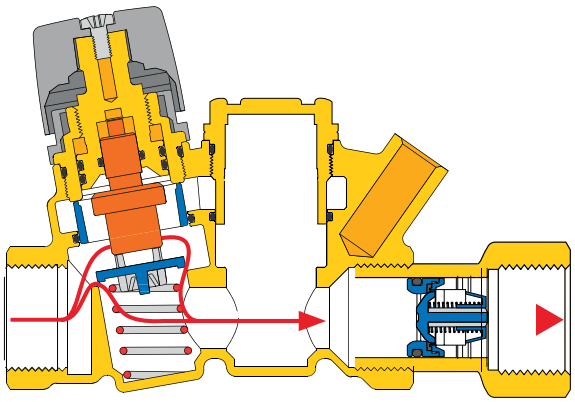

system, which can occur due to pressure differentials caused by highly variable DHW demands. Each branch in a multi-branch recirculation system must include a check valve. The check valve option offered for the ThermoSetter™ reduces installation time compared to installing a separate external check valve.

THERMOSTATIC DISINFECTION OPERATION

Readers examining Figures 3-8 and 3-11b are likely wondering about the chamber to the right of the valve's thermostatic element. What is its purpose?

This chamber allows the ThermoSetter™ to be further configured for DHW recirculation systems that incorporate automatic disinfection cycles.

A typical thermal disinfection cycle causes the water entering the DHW distribution system to rise to an elevated temperature sufficient to quickly kill pathogens such as Legionella bacteria. Although specific standards and code requirements vary, a typical thermal disinfection cycle causes the hot water entering the DHW distribution system to reach the following temperatures for the specific time, on a once-per-24-hour basis:

158°F (70°C) for 10 minutes
149°F (65°C) for 15 minutes
140°F (60°C) for 30 minutes

These temperature/duration combinations apply to the farthest fixture in any branch of the recirculating systems. The first two require temperatures that are higher than the maximum setting of the thermostatic balancing element in the ThermoSetter™ valve. Thus, ThermoSetter™ valves *with only a thermostatic balancing element* are not suitable for use in systems that employ thermal disinfection cycles. However, the ThermoSetter™ valve can be further configured for use in systems that employ thermal disinfection.

Figure 3-12 shows a ThermoSetter™ valve with a second thermostatic element mounted in the valve's downstream

Figure 3-12a

Figure 3-12b

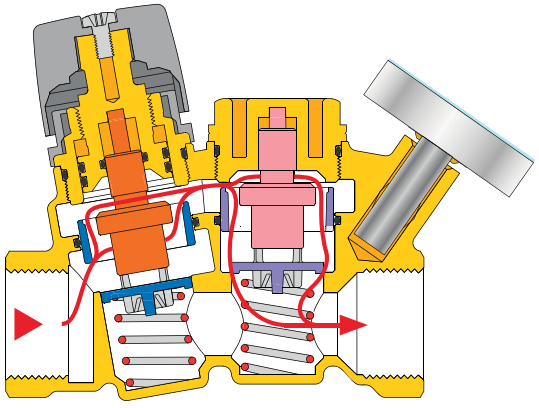

chamber. It also shows the optional thermometer inserted into a dry well at the valve's outlet. This thermometer indicates the water temperature leaving the valve.

The second thermostatic element allows flow to pass through the upstream thermostatic balancing element, while the latter operates over its normal range of temperature. However, if the entering water temperature reaches approximately 155ºF, as it would at the beginning of a thermal disinfection cycle, the second thermostatic element begins to open. As this occurs, a parallel flow passage within the valve causes the valve's Cv to increase from its minimum of 0.23 at an entering water temperature of 155ºF to a Cv of 1.2 at an entering water temperature of 160ºF, as shown in Figure 3-13.

Figure 3-13

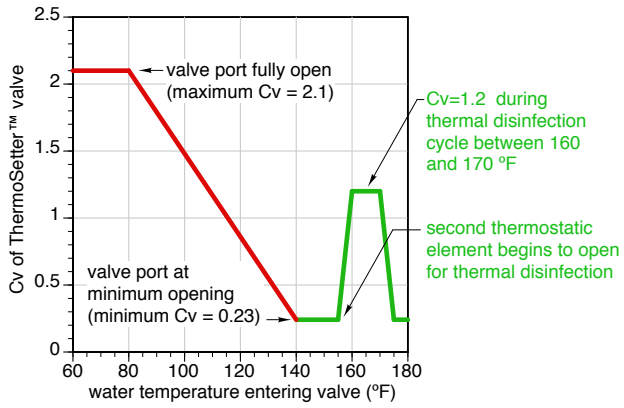

The increased Cv value allows increased flow of high temperature water through the valve during the thermal disinfection cycle. When the entering water temperature reaches 170ºF, the second thermostatic element begins to reduce its Cv, and hence reduce flow through the valve. The Cv value decreases back to its minimum value of 0.23 if the entering water temperature reaches approximately 175ºF or higher. Reducing the Cv under these conditions allows thermal balancing between the branches of the system. It also allows a variable-speed recirculation circulator to reduce electrical input power when the water temperature entering the ThermoSetter™ valve is sustained above the water temperature needed for thermal disinfection. At the completion of the thermal disinfection cycle, the water temperature entering the valve decreases, and the valve returns to its normal operation with the second thermostatic element closing the bypass opening, returning flow control to the upstream thermostatic element.

ACTUATOR-CONTROLLED DISINFECTION

In some recirculating DHW systems, disinfection is accomplished using methods such as periodically injecting chemicals into the system, or irradiating the water with ultraviolet light. These methods are controlled by an automation system. They don't necessarily require the same elevated water temperatures used with thermal disinfection, but they do require similar flow rates. To accommodate these methods, the ThermoSetter™ valve can be equipped with an electrically-actuated secondary valve cartridge rather than a second thermostatic element. A ThermoSetter™ valve equipped with a low voltage electric actuator is shown in Figure 3-14.

Figure 3-14a

Figure 3-14b

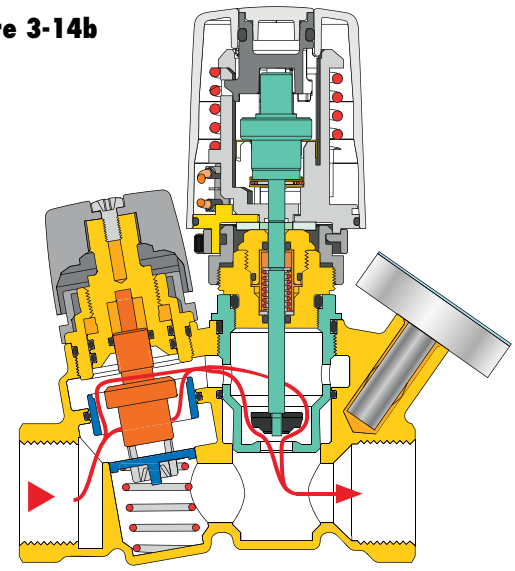

This version of the ThermoSetter™ includes a spring-loaded valve cartridge in the downstream chamber. An internal spring holds this valve in the open position. When the actuator is fastened to the ThermoSetter™ body, this spring is compressed and the valve disc positioned so that flow will pass through the upstream balancing element in the normal manner. When the actuator is powered on by 24 VAC, it retracts its stem, allowing the downstream valve to open such that the flow coefficient through the valve stabilizes at 1.2. The valve remains at this disinfection Cv value as long as the actuator is energized. When power is removed from the actuator, the valve returns to normal thermal balancing operation.

Figure 3-15 shows the flow characteristics of a ThermoSetter™ valve with actuator-controlled disinfection taking effect at 145ºF.

Figure 3-15

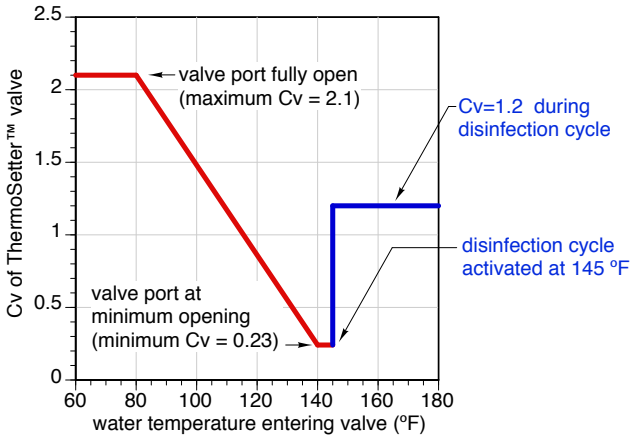

Actuator-control of ThermoSetter™ valves allows options that are not available with thermostatic-based disinfection. For example, in a multi-branch system, any ThermoSetter™ valve equipped with an actuator can be controlled independently. This allows for different disinfection cycle times or frequencies in specific portions of the system. It also allows any valve to coordinate with other hardware in the system such as chemical injectors or ultraviolet water sanitizers.

The dry well at the outlet of the ThermoSetter™ valve can be equipped with a temperature sensor (rather than a thermometer). That sensor can provide the outlet temperature of the valve to the controls for a system using thermal disinfection, and thus be used to verify that suitable disinfection actions have occurred in each branch of the system.

When designing a recirculation system, the suggested Cv value for a ThermoSetter™ valve is 0.52. This corresponds to how the valve would operate in a system with an allowed DHW temperature drop of 10ºF between the heat source and the farthest fixture.

Figure 4-1

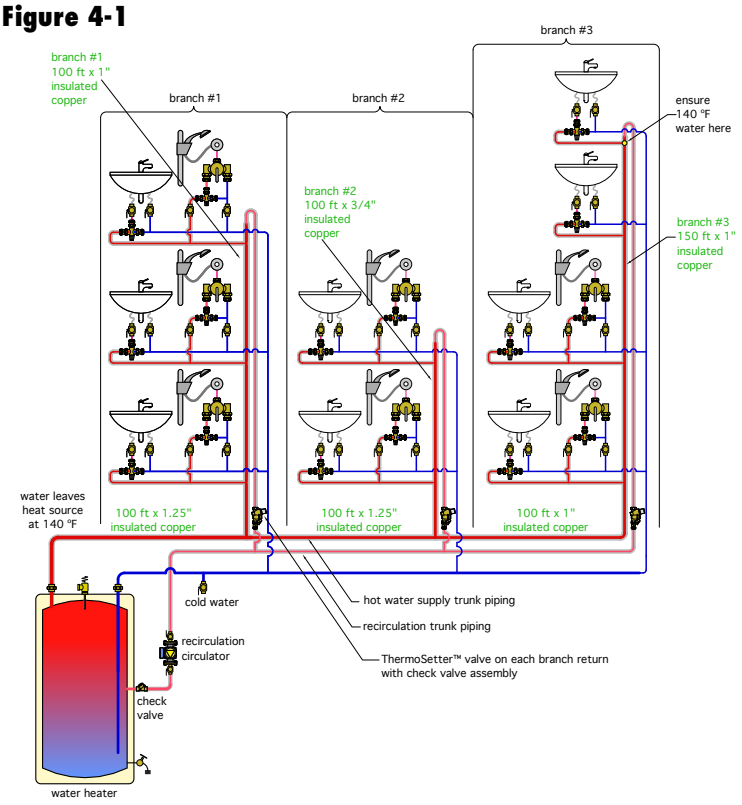

Figure 4-2

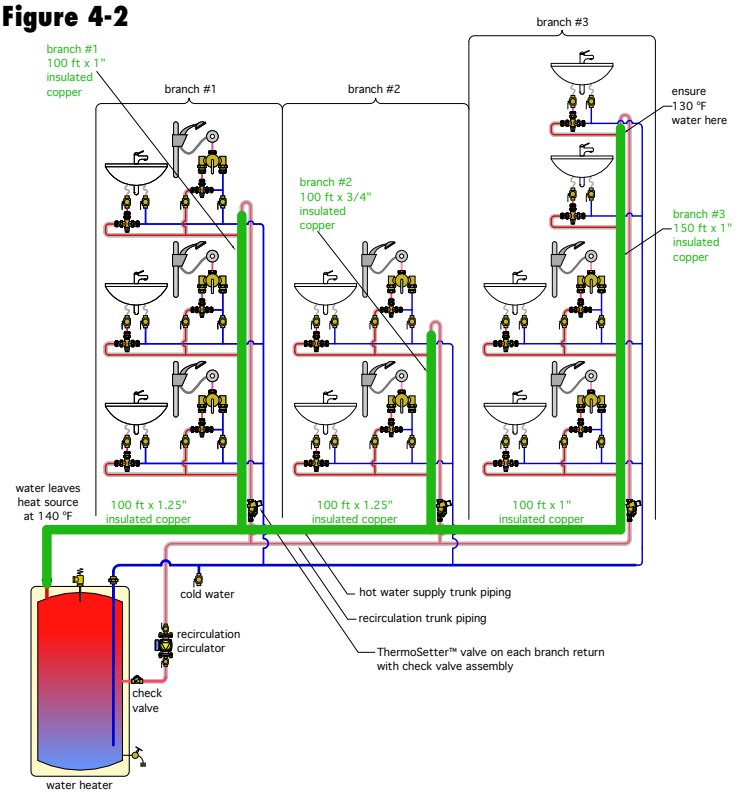

4. DESIGN OF MULTI-BRANCH RECIRCULATION SYSTEMS

Many of the principals for designing a single-loop DHW recirculation system that were discussed in section 2 also apply to systems with multiple branches. These include the concept of providing a minimal acceptable DHW supply temperature at the farthest fixtures, evaluating piping heat loss, and estimating the recirculation flow rate and associated head loss of the system so that a suitable circulator can be selected.

However, unlike in a single-loop system, flow balancing is necessary to ensure adequate but not excessive flow through each branch of the system. This section discusses the specifics for a multi-branch system using ThermoSetter™ valves.

Figure 4-1 shows a multiple-branch DHW recirculation system.

The system consists of 3 branches, each with multiple fixture groups. Each fixture is protected against high delivery temperature by an ASSE 1070 thermostatic mixing valve. These valves are set to deliver 110ºF water to their fixtures. To prevent Legionella growth, water leaves the heat source at 140ºF. The designer needs to ensure that the minimum water temperature reaching the hot port of the thermostatic mixing valve at the farthest fixture is 130ºF. Each branch of the system includes a Caleffi ThermoSetter™ balancing valve.

The designer needs to determine the necessary recirculation flow rates in each branch, the total recirculation flow rate and the head requirement for the recirculation circulator.

The first step in the process is to estimate the heat loss of the piping to the farthest fixture in each branch. These piping segments are identified with green overlays in Figure 4-2.

Each major segment of the hot water supply piping is identified for length and pipe size. All piping is assumed to be covered with 1/2“ wall thickness elastomeric foam insulation.

Figure 4-3

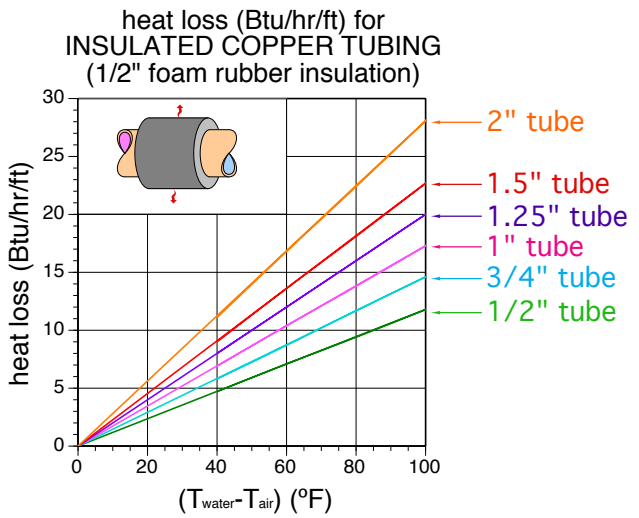

The heat loss of each piping segment can therefore be estimated using Figure 2-10b (repeated as Figure 4-3.)

Since water leaves the heat source at 140ºF, and must be no less than 130ºF at the farthest fixture in each branch, the average water temperature in the system is 135ºF. This is the temperature that will be used to estimate piping heat loss. Assume the air temperature surrounding the piping is 70ºF. Thus, the ΔT value for the horizontal axis of Figure 4-3 will be 135ºF - 70ºF = 65ºF. The heat loss per foot of piping for the 3 pipe sizes involved are as follows:

- 3/4" insulated copper tubing: 9.5 Btu/hr/ft
- 1" insulated copper tubing: 11.2 Btu/hr/ft
- 1.25" insulated copper tubing: 12.9 Btu/hr/ft

Using these values, the *total* heat loss of *all* the hot water supply piping is approximately:

(200 ft x 12.9 Btu/hr/ft) + (350 ft x 11.2 Btu/hr/ft) + (100 ft x 9.5 Btu/hr/ft) = **7,450 Btu/hr**

The total recirculation flow rate to provide this total heat loss at a 10 ºF temperature drop can be calculated using Formula 4-1:

Formula 4-1:

$$f = \left(\frac{Q}{500 \times \Delta T}\right) = \left(\frac{7450}{500 \times 10}\right) = 1.49 \approx 1.5 gpm$$

Where:

f = total recirculation flow rate (gpm)

Q = total heat loss of supply piping (Btu/hr)

ΔT = temperature drop from heat source to farthest fixture (ºF)

Keep in mind that, while a flow rate of 1.5 gpm satisfies the thermodynamic requirement to provide the total heat loss of all supply piping based on a 10ºF drop, *it doesn't guarantee that the water temperature at the farthest fixture in each branch will not be more the 10ºF below the water temperature of the heat source.*

Finding the branch flow rate necessary to achieve the minimum temperature of 130ºF at the farthest fixture in each branch requires application of basic thermodynamics combined with some algebra. There is a need to generate multiple simultaneous formulas that govern the relationship between heat transfer, flow rate and temperature drop. These formulas are all based on variations of Formula 4-1, as well as recognizing that the flow entering a tee must equal the flow exiting that tee (e.g., conservation of mass).

The formulas to be generated will have both known and unknown quantities. Figure 4-4 shows the unknown quantities (e.g., flow rates f_1, f_2, f_3, and temperatures T_1 and T_2). It also shows the known quantities (e.g., total recirculation flow rate = 1.5 gpm, the estimated heat loss from the piping segments, and the 130ºF water temperature at the farthest fixture in each branch).

The flow rate in the first segment of the hot water supply trunk must be the sum of the three branch flow rates (f_1+f_2+f_3). We have already determined this flow rate to be 1.5 gpm based on Formula 4-1 and the thermodynamics requirements of the entire supply piping system dissipating 7,450 Btu/hr while operating at a temperature drop of 10ºF.

Thus, we can write Formula 4-2:

Formula 4-2:

$$f_1 + f_2 + f_3 = 1.5 gpm$$

We also know the estimated heat loss from the first segment of the supply trunk to be 1,290 Btu/hr. Therefore the temperature at node T_1 (marked as an orange square in Figure 4-4) can be calculated based on the necessary temperature drop at a flow rate of 1.5 gpm, and the heat loss of this first trunk segment:

Figure 4-4

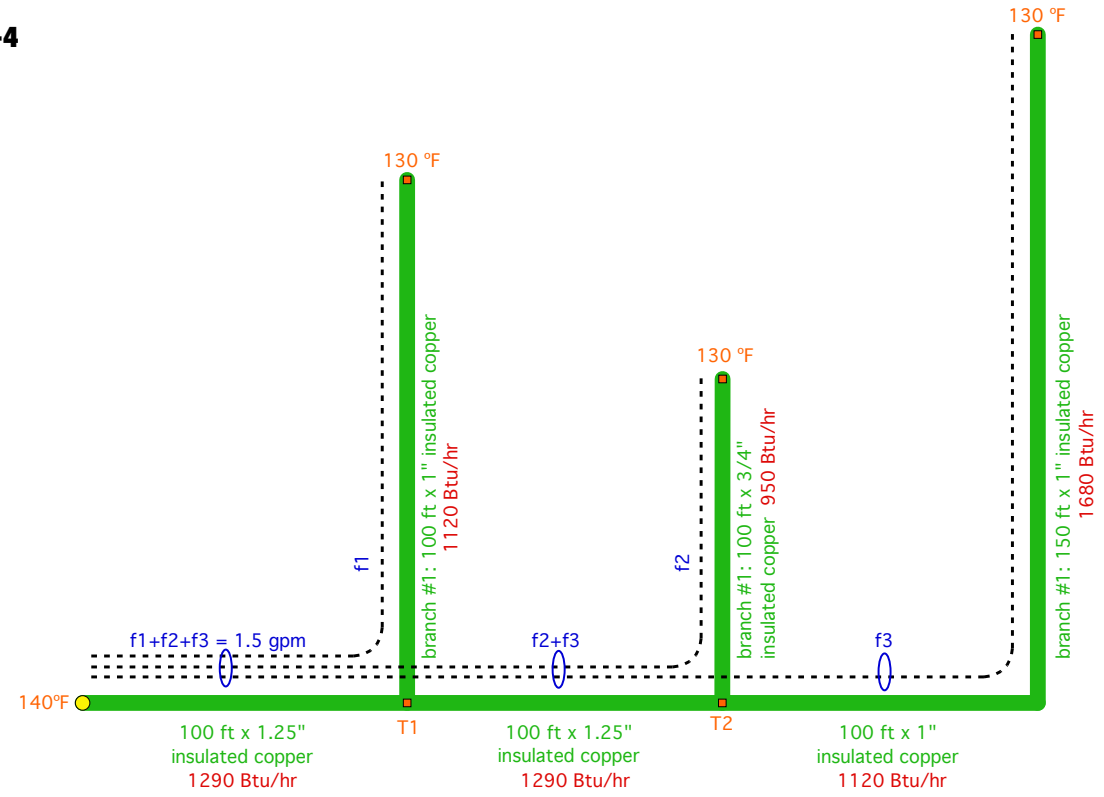

Figure 4-5

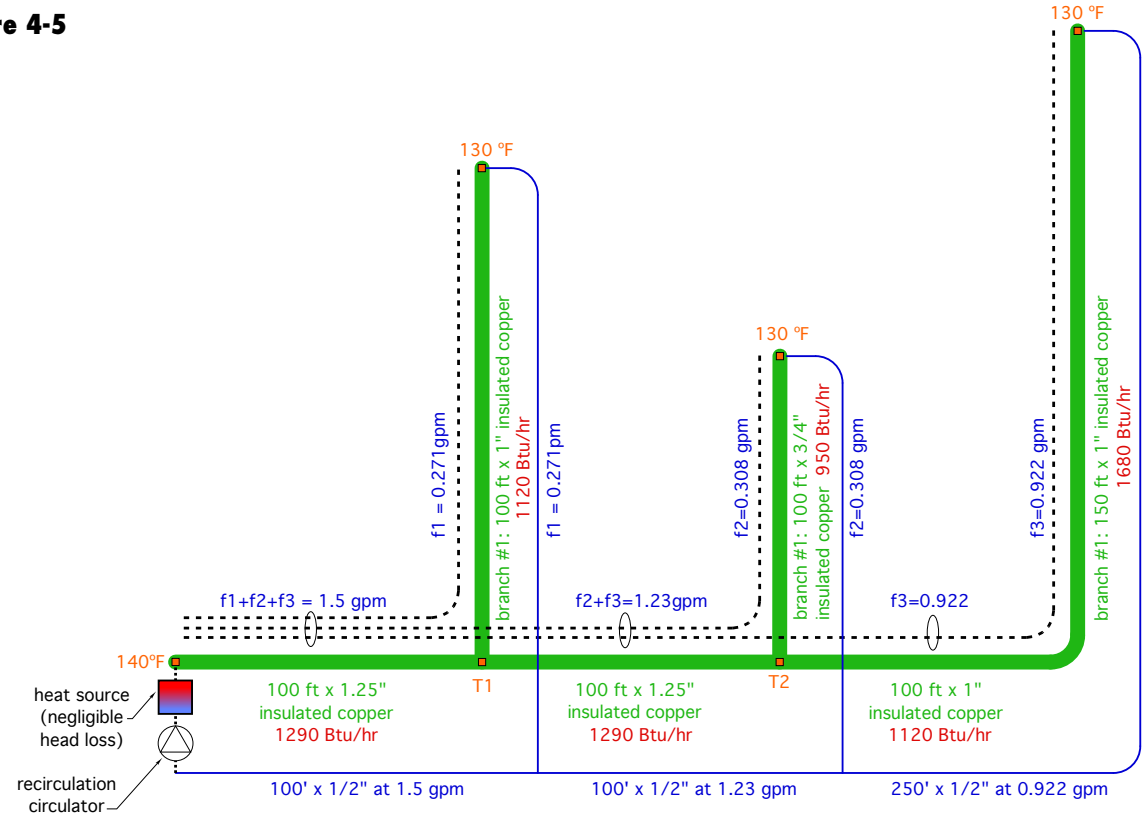

Formula 4-3:

$$T_1 = 140 - \frac{1290}{500 \times 1.5} = 138.28^\circ F$$

We also know the estimated heat loss of the riser in branch #1 to be 1,120 Btu/hr, as well as the temperature at the end of this branch to be 130°F. Therefore, we can determine the necessary flow rate in this branch based on the heat dissipation and temperature drop:

Formula 4-4:

$$f_1 = \frac{1120}{500 \times (138.28 - 130)} = 0.271 gpm$$

This implies:

$$(f_2 + f_3) = 1.5 - 0.2705 = 1.23 gpm$$

The temperature at node T_2 (also marked with an orange square in Figure 4-4) must correspond to the temperature drop, estimated heat loss and flow rate of the second segment of the supply trunk. We can write the relationship as Formula 4-5:

Formula 4-5:

$$T_2 = 138.28 - \frac{1290}{500 \times (f_2 + f_3)}$$

But, since we know that (f_2+f_3) = 1.2295, we can substitute this number into Formula 4-5 and solve for T_2.

$$T_2 = 138.28 - \frac{1290}{500 \times (f_2 + f_3)} = 138.28 - \frac{1290}{500 \times (1.2295)} = 136.18^\circ F$$

Knowing temperature T_2, we can solve for flow rate f_2 based on the known heat loss of 950 Btu/hr along the riser of branch #2:

Formula 4-6:

$$f_2 = \frac{950}{500 \times (136.18 - 130)} = 0.308 gpm$$

The final step is to get flow rate f_3 as follows:

$$f_3 = 1.5 - f_1 - f_2 = 1.5 - 0.2705 - 0.3074 = 0.922 gpm$$

To summarize, the branch flow rates needed to ensure 130°F at the farthest fixture in each branch are:

branch #1 flow rate = 0.271 gpm
branch #2 flow rate = 0.308 gpm
branch #2 flow rate = 0.922 gpm

Assume that the recirculation return piping is all 1/2" copper tubing. Figure 4-5 shows the supply and return piping as well as the previously calculated flow rates and temperatures.

DETERMINING HEAD LOSS:

Once the branch flow rates have been estimated, the next step is to determine the *head* loss of the most restrictive branch circuit path.

In some systems, this will path will not be readily apparent. It will be necessary to calculate the head loss from the discharge port of the recirculation circulator to the inlet port of that circulator through each branch circuit path. This head loss should be calculated based on the flow rate within each segment of each branch, factoring in different pipe sizes and flow rates. Once these head losses have been individually determined, the largest head loss will be used to select the operating point of the recirculation circulator.

For the example system of Figure 4-1, in combination with the flow rates just determined, it is readily apparent that the circuit path through branch #3 will have the highest head loss. It has by far the longest piping run and needs to operate at a flow rate significantly higher than those of the other two branches.

The head loss through branch #3 can be determined based on the methods and data given in Appendix B. The head loss in smooth tubing is estimated using Formula B-1:

Formula B-1 (from Appendix B)

$$H_L = (acl) f^{1.75}$$

Where:

H_L = head loss of the piping segment (feet of head)

a = fluid properties factor read from Figure B-1 in Appendix B

c=pipe size factor read from figure B-2 in Appendix B

l = pipe segment length (feet)

f = flow rate (gpm)

Based on water at an average temperature of 135°F, the "a" value for Formula B-1 in Appendix B is 0.048. The "c"

values for Formula B-1, and for 1.25", 1", 3/4", and 1/2" copper piping are as follows:

1.25" piping: c = 0.0068082
1" piping: c = 0.01776
3/4" piping: c = 0.061957
1/2" piping: c = 0.33352

The following piping segments are present in the circuit path through branch 3:

100 feet of 1.25" copper operating at 1.5 gpm
100 feet of 1.25" copper operating at 1.23 gpm
250 feet of 1" copper operating at 0.922 gpm
250 feet of 1/2" copper operating at 0.922 gpm
ThermoSetter™ valve with Cv = 0.52
100 feet of 1/2" copper operating at 1.23 gpm
100 feet of 1/2" copper operating at 1.5 gpm
Tank type water heater (negligible flow resistance)

The head loss for each piping segment within this flow path, and at the flow rate at which that piping segment operates, are as follows:

$$H_L = (acl)f^{1.75} = (0.048 \times 0.0068082 \times 100)(1.5)^{1.75} = 0.0664\,ft$$
$$H_L = (acl)f^{1.75} = (0.048 \times 0.0068082 \times 100)(1.23)^{1.75} = 0.0469\,ft$$
$$H_L = (acl)f^{1.75} = (0.048 \times 0.01776 \times 250)(0.922)^{1.75} = 0.1849\,ft$$
$$H_L = (acl)f^{1.75} = (0.048 \times 0.33352 \times 250)(0.922)^{1.75} = 3.47\,ft$$
$$H_L = (acl)f^{1.75} = (0.048 \times 0.33352 \times 100)(1.23)^{1.75} = 2.30\,ft$$
$$H_L = (acl)f^{1.75} = (0.048 \times 0.33352 \times 100)(1.5)^{1.75} = 3.25\,ft$$

The head loss through the ThermoSetter™ in branch #3 should be calculated based on a design Cv value of 0.52. It would be:

$$H_L = 2.308\left(\frac{f}{Cv}\right)^2 = 2.308\left(\frac{0.9221}{0.52}\right)^2 = 7.26\,ft$$

The total estimated head loss *of the piping* in the circuit path through branch #3 is:

(0.0664 + 0.0469 + 0.1849 + 3.47 + 2.3 + 3.25) **x 1.1** = 10.25 feet

The multiplying factor of 1.1 applied to this summation is a 10% added allowance to account for the head loss of fittings.

The total estimated head loss is the head loss of the piping (10.25 feet) plus the head loss of the ThermoSetter™ valve (7.26 feet), which sums to 17.5 feet. The calculated "duty point" of the circulator for this system is the total flow rate (1.5 gpm) combined with the total estimated head loss of 17.5 feet. The designer can now check pump curves for a circulator matching this requirement.

Figure 4-6 shows the calculated duty point along with the pump curve for a potential circulator.

The pump curve passes *slightly* above the calculated duty point of the recirculation system (e.g., 1.5 gpm @ 17.5 feet of head loss). This is generally acceptable. It will result in a flow rate slight higher than the duty point flow rate of 1.5 gpm.

It's worth noting that the majority of the head loss through the branch #3 circuit path is due to the 1/2" return piping. Changing some or all of the return piping to 3/4" size would substantially reduce this head loss, and thus allow a smaller recirculation circulator.

If the piping in this example system had not been insulated, the heat loss from every piping segment would be significantly higher, and thus the recirculation flow rates would be higher. These higher flow rates would also increase head losses (assuming that the pipe sizes did not change). High recirculation flow rates and higher head losses would likely require a larger circulator with a higher installation and operating cost.

Best practices for recirculating DHW delivery systems include insulation on all piping segments (supply and return). In some cases, a minimum specification for this insulation may be part of the local plumbing or mechanical code.

Figure 4-6

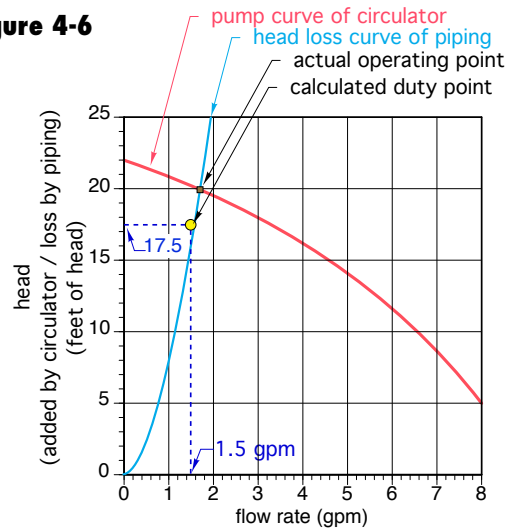

5. ELECTRONICALLY-MANAGED RECIRCULATION SYSTEMS

The multi-branch DHW recirculation system shown in Figure 5-1 combines Caleffi ThermoSetter™ balancing valves, with an electronically-controlled point-of-distribution mixing valve and a variable-speed recirculation circulator.

The electronically-controlled point-of-distribution mixing valve allows precise control of the water temperature entering the DHW distribution system. It can be configured to provide lower DHW temperatures, such as 120-130ºF into the delivery piping most of the time, while automatically increasing that temperature to execute a specific thermal disinfection protocol. Operating the delivery system at temperatures lower than those required for thermal disinfection lowers piping heat loss, which reduces the building's cooling load. The controller operating the mixing valve can also receive information from multiple temperature sensors to ensure that the entire system has undergone adequate thermal disinfection. If an abnormal condition is detected, the controller can automatically notify building maintenance staff.

The system shown in Figure 5-1 also uses a "sensorless" variable-speed circulator with an electronically-commutated motor. Figure 5-2 shows an example of such a circulator with a stainless steel volute for use in domestic hot water systems.

Figure 5-1

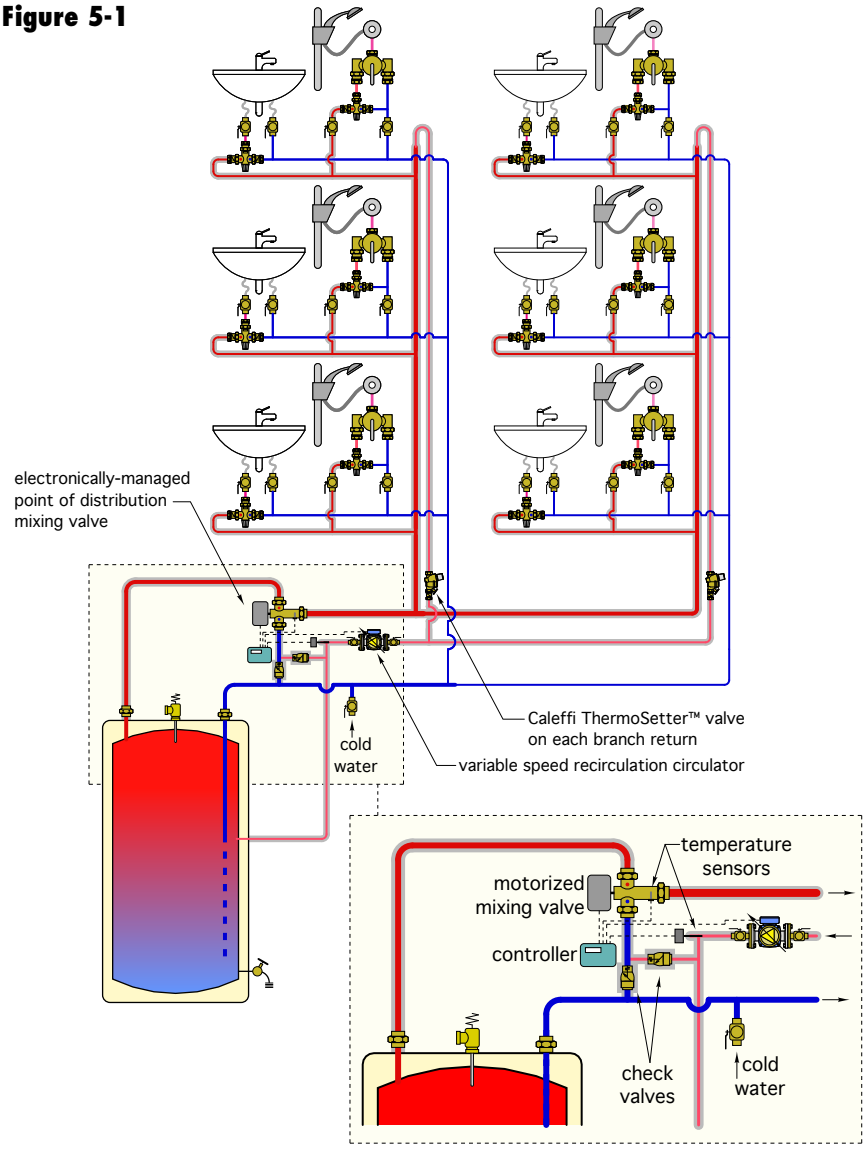

This type of circulator is widely available from multiple suppliers.

The piping configuration in Figure 5-1 is similar to a "2-pipe direct return" hydronic heating distribution system. As such, the variable-speed circulator could be set for proportional differential pressure control mode, with the "design" head equal to the head loss of the branch circuit path of highest resistance. This action is shown in Figure 5-3.

As the ThermoSetter™ valves in each branch reduce recirculation flow rates, the variable-speed circulator

Figure 5-2

Courtesy of Grundfos.

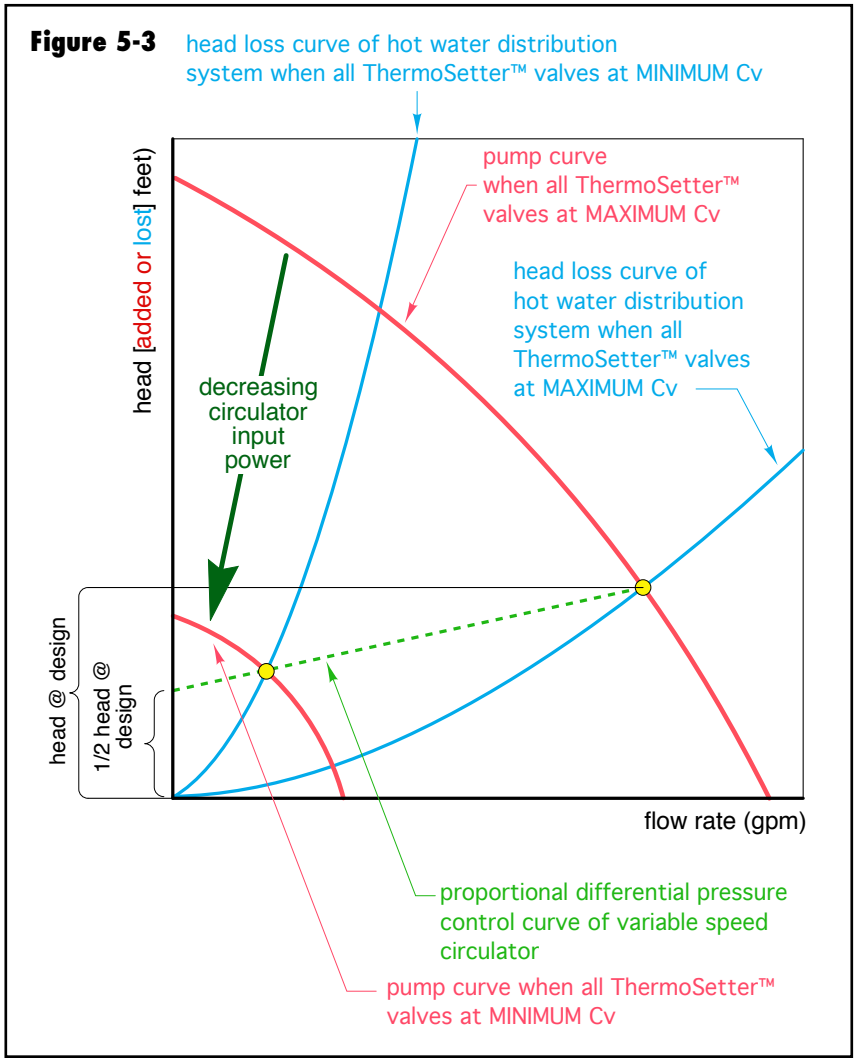

will automatically reduce speed to maintain the required pressure differential on the recirculation system. Reducing circulator speed when appropriate can lower electrical energy use significantly.

It is also possible to control the speed of the circulator, as well as the on/off status of the actuators on the ThermoSetter™ valves, from a building automation system based on specific "normal operation" and "disinfection operation" conditions that need to be maintained.

SUMMARY

Recirculating domestic hot water delivery systems conserve water and reduce energy use. They also enhance occupant comfort by providing nearly instant hot water delivery at all fixtures, regardless of usage patterns. When used with the proper controls, they also greatly decrease the risk of dangerous pathogens such as Legionella bacteria in the system.

The specific needs of multi-branch domestic hot water delivery systems are optimally met using balancing valves that sense and react to water temperature at the farthest fixture in each branch. Such valves can reduce the flow rate through each branch of the recirculation system to the minimum needed to ensure adequate hot water delivery temperature to the farthest fixtures. Flow rate reductions at other times allow variable-speed recirculation circulators to significantly reduce input power, and thus save electrical energy.

Caleffi ThermoSetter™ valves are ideally matched to several types of DHW recirculation systems, including those using thermal, chemical or UV light disinfection details.

APPENDIX A: PIPING SYMBOL LEGEND

GENERIC COMPONENTS

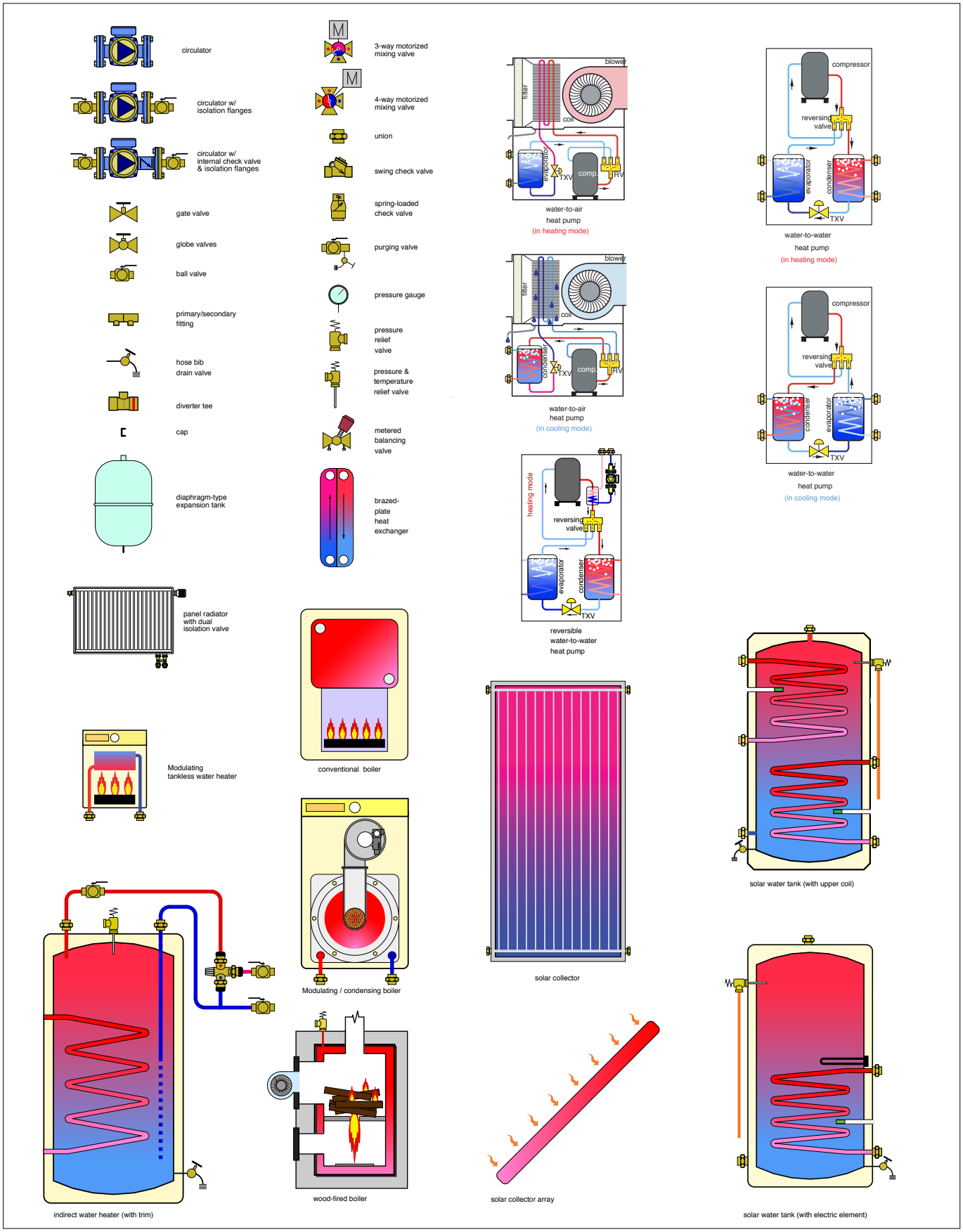

APPENDIX A: PIPING SYMBOL LEGEND

CALEFFI COMPONENTS

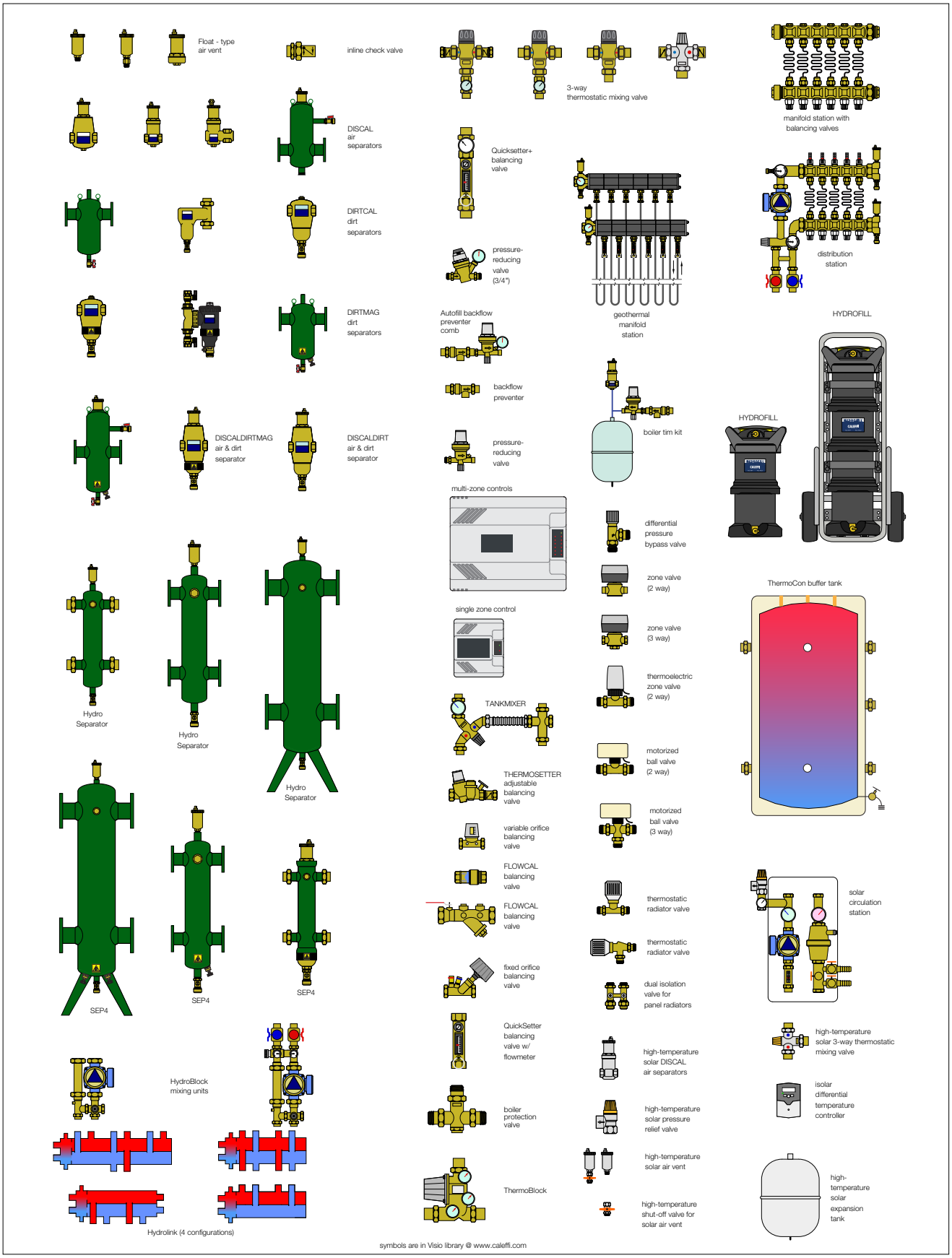

symbols are in Visio library @ www.caleffi.com

APPENDIX B: HEAD LOSS CALCULATION METHOD

This appendix presents a simple method for estimating the head loss of piping paths or circuits constructed of *smooth tubing,* such as copper tubing or PEX.

The head loss of a piping path or circuit can be determined using Formula B-1.

Formula B-1

$$H_L = (acl)(f)^{1.75}$$

H_L = Head loss of circuit (ft of head)
a = a factor that depends on the average water temperature in piping (see Figure B-1)
c = a factor determined by the type and size of tubing in the circuit (see Figure B-2)
l = total equivalent length of the circuit (ft)
f = flow rate (gpm)
1.75 = an exponent of flow rate

The values of "a" read from Figure B-1 should be based on the average water temperature in the piping. Thus, for a recirculation loop with a supply temperature of 130°F and a return temperature of 120°F, the value of "a" would be determined at the average fluid temperature of 125°F.

Figure B-1

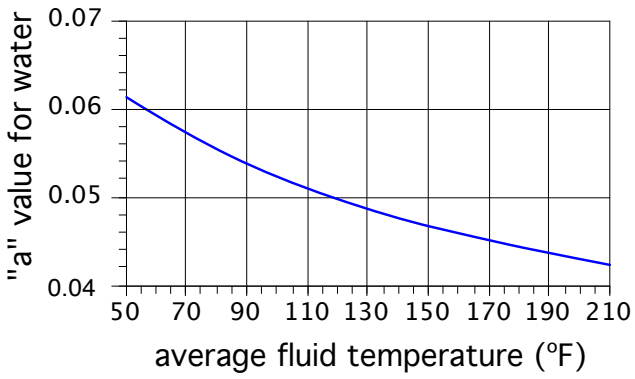

Figure B-2

Tube (size & type)	C value
3/8" copper tube	1.0164
1/2" copper tube	0.33352
3/4" copper tube	0.061957
1" copper tube	0.01776
1.25" copper tube	0.0068082
1.5" copper tube	0.0030667
2" copper tube	0.0008331
2.5" copper tube	0.0002977
3" copper tube	0.0001278
3/8" PEX	2.9336
1/2" PEX	0.786
3/4" PEX	0.2947
1" PEX	0.14203
1.25" PEX	0.01668
1.5" PEX	0.007554
2" PEX	0.002104

TankMixer™ Water heater tank mixing valve

520 series

Function

The Caleffi TankMixer™ 520_AX series kit combines a three-way thermostatic mixing valve with a cold water cross, with recirculation port, and flexible pipe for quick and easy installation on a water heater. The TankMixer™ maintains the desired output temperature of the mixed water at a constant set value compensating for both temperature and pressure fluctuations of the incoming hot and cold water. The mixing valve hot inlet port closes tight to prevent temperature creep in recirculation applications.

Certified to ASSE 1017 and Low Lead Plumbing Law by ICC-ES.

ASSE 1017

Product range

52050_AX series	Kit containing adjustable three-way thermostatic mixing valve, angle body with cold water cross with check valve and flexible connector pipe.....connections ¾" NPT female union to water heater; ¾" sweat, press, and NPT male union mix outlet and cold water inlet
52051_AX series	Kit containing adjustable three-way thermostatic mixing valve with mixed outlet temperature gauge, angle body with cold water cross with check valve and flexible connector pipe .....connections ¾" NPT female union to water heater; ¾" sweat, press, and NPT male union mix outlet and cold water inlet
520051A	Thermostatic mixing valve body only. Variety of connection fittings available for sourcing separately .....connections 1" male union thread

Technical specifications

Materials

- Valve body:	DZR low-lead brass
- Cold water cross body:	DZR low-lead brass
- Shutter, seats and slide guides:	PSU
- Springs:	stainless steel
- Seals:	EPDM
- Adjustment knob	ABS
- Large ID flexible pipe:	stainless steel
- Recirculation port plug:	low-lead brass

Performance

Suitable fluids:	water, glycol solutions
Max. percentage of glycol:	50%
Setting range:	95–150° F (35–65° C)
Accuracy:	±3° F (±2° C)
Max. working pressure (static):	150 psi (10 bar)
Max. working pressure (dynamic):	75 psi (5 bar)
Max. hot water inlet temperature:	195° F (90° C)
Max. inlet pressure ratio (H/C or C/H) for optimal performance:	2:1
Minimum temperature difference between hot water inlet and mixed water outlet for optimal performance:	27° F (15° C)
Minimum flow to ensure optimal performance:	0.5 gpm (2 L/min)

Certifications

1. ASSE 1017/CSA B125.3, certified by ICC-ES, file PMG-1357.
2. NSF/ANSI 372-2011, Drinking Water System Components-Lead Content Reduction of Lead in Drinking Water Act, California Health and Safety Code 116875 S.3874, Reduction of Lead in Drinking Water Act, certified by ICC-ES, file PMG-1360.

Connections

to water heater:	
- NPT female union:	¾"
to mix temperature outlet and cold water inlet	
- sweat union:	¾"
- press union:	¾"
- NPT male union:	¾"
recirculation inlet port in cross:	
- NPT female (plug included)	½"

Dimensions

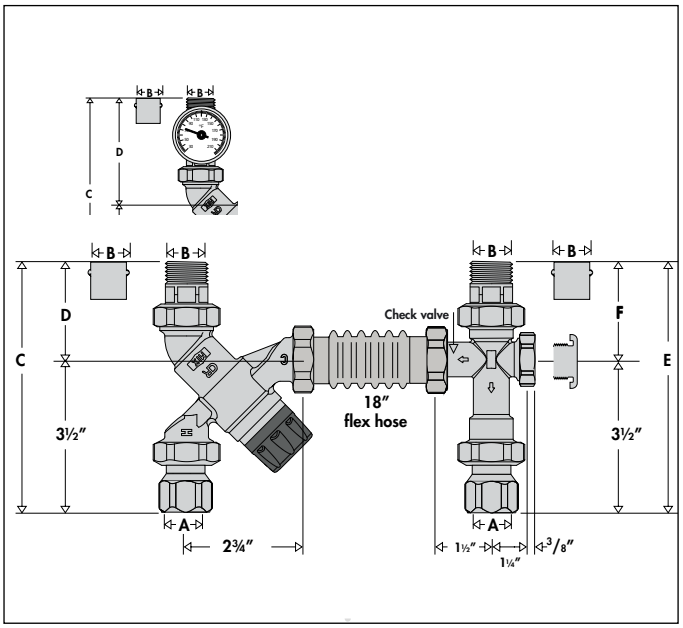

Code	A	B	C	D	E	F	Wt. (lb.)
520500AX	¾" nptf	¾" nptm	5¾"	2¼"	5¾"	2¼"	2.4
520506AX	¾" nptf	¾" press	6 1/16"	2 9/16"	6 1/16"	2 9/16"	2.4
520509AX	¾" nptf	¾" swt	5 11/16"	2 3/16"	5 11/16"	2 3/16"	2.4

No temperature gauge.

Code	A	B	C	D	E	F	Wt. (lb.)
520510AX	¾" nptf	¾" nptm	7¾"	4¼"	5¾"	2¼"	2.9
520516AX	¾" nptf	¾" press	8 1/16"	4 9/16"	6 1/16"	2 9/16"	2.9
520519AX	¾" nptf	¾" swt	7 11/16"	4 3/16"	5 11/16"	2 3/16"	2.9

With temperature gauge.

Operating principle

The TankMixer™ point of distribution mixing valve is an angled configuration combined with a flexible hose and cold water cross for labor-saving installation to water heaters. Direct mounts to universal ¾" male NPT threaded top pipe connections. The thermostatic mixing valve mixes the hot and cold water at the inlets to maintain constant mixed water at the desired set temperature. This provides increased usable hot water capacity on existing or new high efficiency water heaters by allowing water to be stored at a higher temperature and safely delivered at lower temperatures to all fixtures. In addition, it can be used to reduce legionella growth by allowing the water heater thermostat to be set at 140°F. The flexible hose length allows mounting to standard water heater tank sizes. The TankMixer™ comes with a recirculation port that can be plugged or used for connecting to a hot water recirculation loop. The TankMixer™ mixing valves are supplied complete with a check valve (A) on the cold water cross outlet port to the mixing valve.

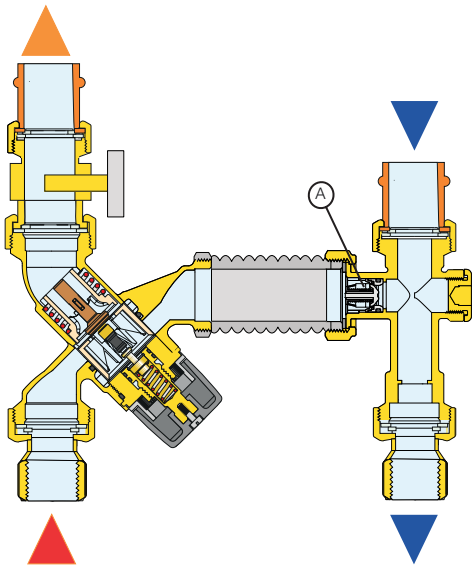

Water heater

As a result of the National Appliance Energy Conservation Act, many water heaters now have more insulation making them physically larger, for the same water capacity, than older models. In space constrained installations replacement units with less storage volume are installed thus requiring higher acquastat temperature settings to provide the not water capacity users were previously accustomed. Mixing valves are thus needed to temper the water to safe levels.

Caleffi TankMixer™ thermostatic mixing valves with cold water cross with check valve assembly and large ID flexible connector will conveniently fit most typical tank type water heaters A recirculation return can be connected at the side port of the cold water cross.

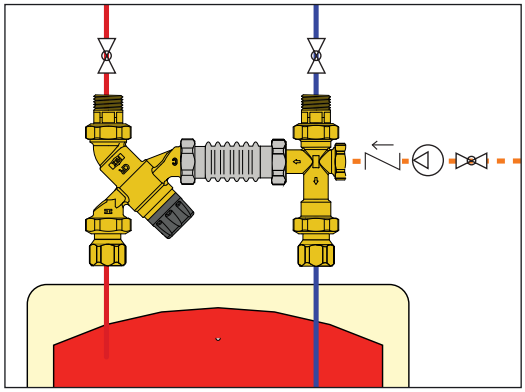

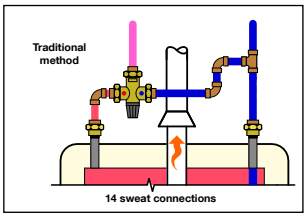

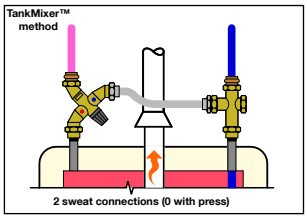

The TankMixer™ comes packaged in a kit with everything needed for fast installation including a variety of union fitting connections including press type.

Replacement parts

ASSE 1017

Replacement body.
Meets requirements of NSF/ANSI 372-2011. Certified to: ASSE 1017/CSA B125.3, Low lead, by ICC-ES file PMG-1360.
End connection flexibility: ½", ¾" or 1" npt female or male, press, PEX barb or sweat with or without check valves, separately sourced for field installation. See Caleffi List Price catalog for fitting selection.

520051A.....1" male union thread

ThermoSetter™
Recirculation thermal balancing valve

116 series

Function

The ThermoSetter™ adjustable thermal balancing valve is used for automatic balancing of recirculation loops in domestic hot water systems, to speed hot water delivery and reduce water waste and save energy. The internal thermostatic cartridge automatically modulates flow to ensure a constant temperature in the recirculation piping system. The ThermoSetter™ has an adjustment knob with 95°F to 140°F (35°C to 60°C) temperature scale indication. An integral dry-well holds a slide-in temperature gauge for local indication, or a sensor for remote temperature sensing. The optional check valve protects against circuit thermo-syphoning.

The 116**2** Series is available with a "disinfection" by-pass cartridge, for use in systems which are designed to perform thermal disinfection for prevention of Legionella. When the disinfection cartridge senses 160°F (70°C) water, indicating disinfection control mode, it automatically opens a by-pass flow path to allow sufficient flow for disinfection to occur. When the supply temperature drops back to normal range, the disinfection by-pass cartridge closes to return flow control to the thermostatic cartridge.

The 116**3** Series is also available with a "disinfection" valve that is controlled by a 24V spring return thermo-electric actuator, rather than thermostatically, thus allowing thermal disinfection mode to be controlled remotely by a building automation system.

Product range

1161_0A series	Thermal balancing valve	size ½" & ¾" NPT female
1161_0AC series	Thermal balancing valve with check valve	size ½" & ¾" NPT female
1161_1A series	Thermal balancing valve with temperature gauge	size ½" & ¾" NPT female
1161_1AC series	Thermal balancing valve with temperature gauge and check valve	size ½" & ¾" NPT female
1162__A series	Thermal balancing valve with thermostatic bypass cartridge and temperature gauge	size ½" & ¾" NPT female
1162__AC series	Thermal balancing valve with thermostatic bypass cartridge, temperature gauge and check valve	size ½" & ¾" NPT female
1163__A series	Thermal balancing valve with actuator bypass valve and temperature gauge	size ½" & ¾" NPT female
1163__AC series	Thermal balancing valve with actuator bypass valve, temperature gauge and check valve	size ½" & ¾" NPT female

Technical specifications

Materials:

Body:	DZR low-lead brass
Adjustable cartridge:	stainless steel & copper
Springs:	stainless steel AISI 302 (EN 10270-3)
Hydraulic seals:	EPDM
Adjustment knob:	ABS

Performance:

Suitable fluid:	water
Max. working pressure:	230 psi (16 bar)
Max. differential pressure:	15 psi (1 bar)
Max. inlet temperature:	195°F (90°C)
Adjustment temperature range:	95-140°F (35–60°C)
Flow Cv (Kv) max:	2.1 (1.8)
Flow Cv (Kv) min:	0.23 (0.2)
Flow Cv (Kv) design:	0.52 (0.45)

Disinfection performance:

Disinfection temperature:	160°F (70°C)
Balancing temperature:	170°F (75°C)
Flow Cv (Kv) disinfection:	1.2 (1.0)

Connections:

Main connections:	½" NPT female
	¾" NPT female
Temperature gauge/sensor dry-well:	0.40 inch (10 mm)

Temperature gauge code 116010

Scale:	30–180°F (0–80°C)
Diameter:	1½" (40 mm)
Stem diameter:	0.35" (9 mm)

Technical specifications of insulation

Materials:	closed cell expanded PE-X
Thickness:	½ inch (13 mm)
Density: -internal part:	1.9 lb/ft³ (30 kg/m³)
-external part:	5.0 lb/ ft³ (80 kg/m³)
Thermal conductivity (DIN52612):	
- at 32°F (0°C):	0.82 BTU · in/hr · ft² · °F (0.0345 W/(m · K))
- at 105°F (40°C):	0.94 BTU · in/hr · ft² · °F (0.0398 W/(m · K))
Coefficient of resistance to the diffusion of vapor:	> 1,300
Working temperature range:	32–212°F (0–100°C)
Flammability (ASTM D 635):	Class VO

Certifications: NSF/ANSI 372-2011, low lead certified by ICC-ES, file PMG-1360.

Dimensions

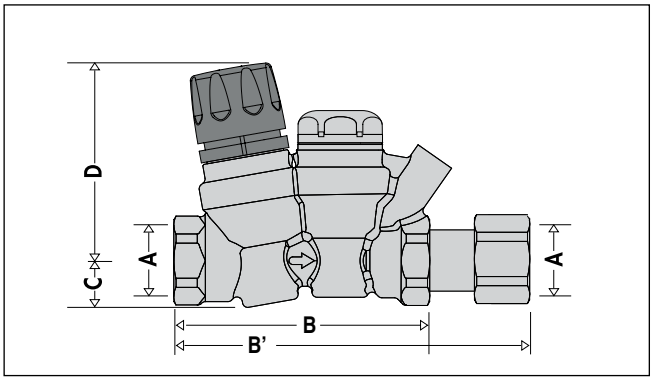

Code	A	B	B'*	C	D	Wt (lb/kg)
116140A(C)	½" NPT F	4"	5 7/16"	¾"	3"	1.7 / 0.75
116141A(C)**	½" NPT F	4"	5 7/16"	¾"	3"	1.7 / 0.75
116150A(C)	¾" NPT F	4"	5 5/8"	¾"	3"	1.5 / 0.70
116151A(C)**	¾" NPT F	4"	5 5/8"	¾"	3"	1.5 / 0.70

*Models with check valve (C) end-to-end dimension is B'.
**with integral outlet temperature gauge.

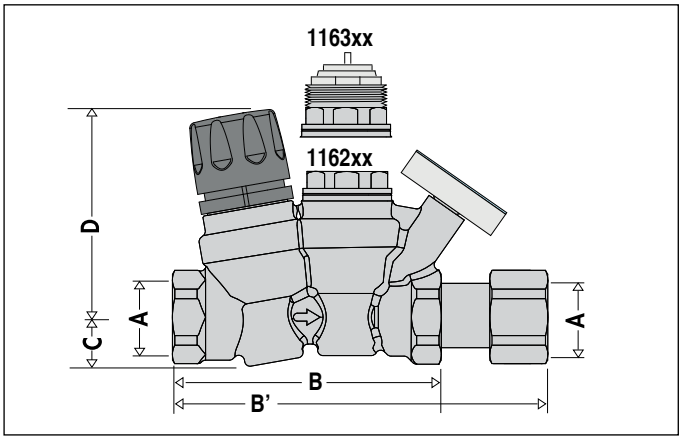

Code	A	B	B'*	C	D	Wt (lb/kg)
116240A(C)	½" NPT F	4"	5 7/16"	¾"	3"	1.7 / 0.75
116250A(C)	¾" NPT F	4"	5 5/8"	¾"	3"	1.5 / 0.70
116340A(C)	½" NPT F	4"	5 7/16"	¾"	3"	1.7 / 0.75
116350A(C)	¾" NPT F	4"	5 5/8"	¾"	3"	1.5 / 0.70

Operating principle

The ThermoSetter™ adjustable thermal balancing valve, 116 series models, installed at the end of each branch of the domestic hot water recirculation system, automatically maintains the set temperature. It controls the water flow rate according to the inlet temperature with the internal adjustable thermostatic cartridge. The thermostatic cartridge modulates the valve opening in response to changing water temperature. A recirculation pump distributes flow to all the branches resulting in effective automatic thermal balancing. The automatic response allows each hot water branch to deliver hot water to each fixture. For optimal energy usage, the ThermoSetter™ is best when used in conjunction with a variable speed recirculation pump.

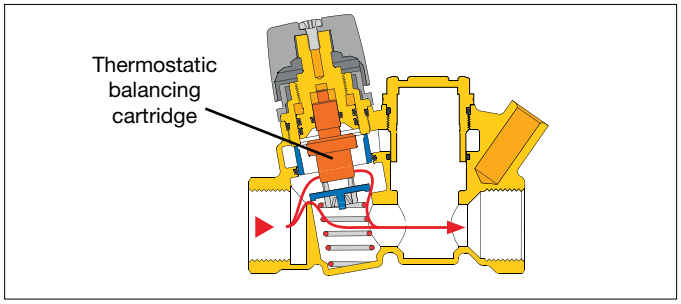

Optional check valve are available for all models, which protect against circuit thermo-syphoning.

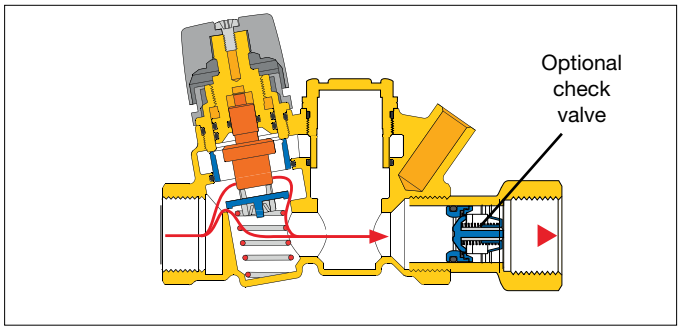

For systems using thermal disinfection for Legionella growth protection, the 116**2** series models incorporate a second thermostatic by-pass cartridge that activates at 160°F. A second flow path opens providing flow for the disinfection process which is independent of the primary balancing cartridge.

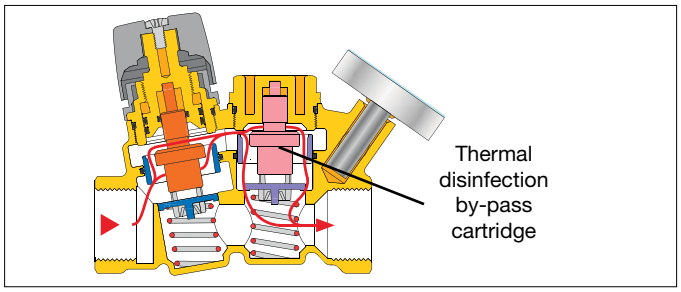

Alternately, the 116**3** series models incorporate a by-pass valve for thermal disinfection which is activated by a optional field mounted thermo-electric actuator, code 656 series, controlled by an automation system.

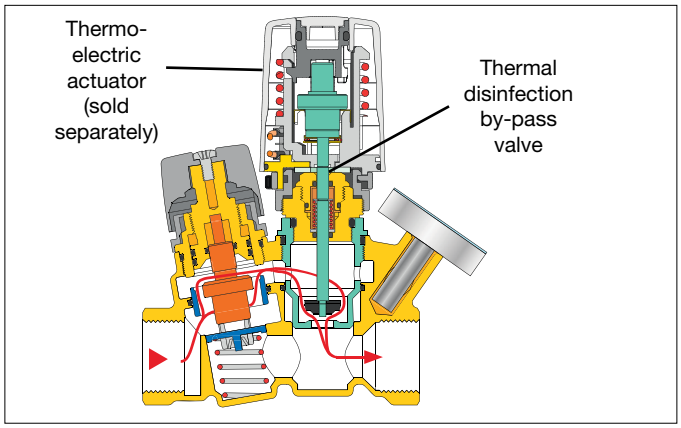

QuickSetter+™ Low-lead balancing valve with flow meter

132 series

Function

The QuickSetter+™ static balancing valve contains a built-in flow meter and sight gauge, negating the need for differential pressure gauges and reference charts. Circuit balancing is fast, easy and accurate. Constructed of DZR low-lead brass, QuickSetter+™ is ideally suited for use in plumbing applications such as hot water recirculation systems. The built-in check valve protects against circuit thermo-siphoning. The outlet temperature gauge (optional) verifies the fluid temperature in the circuit. The flow meter sight gauge is dry (not exposed to the fluid) thus eliminating the possibility of gauge clouding/ scaling over time. The QuickSetter+™ can also be used in heating systems.

Product range

132 series Balancing valve with flow meter, includes check valve, optional outlet temperature gauge.....union connections ½", ¾", 1" sweat, PEX barb or ¾" press

Technical specifications

Materials

Valve

Body:	DZR low-lead brass
Ball:	stainless steel
Ball control stem:	brass, chrome plated
Ball seal seat:	PTFE
Control stem guide:	PSU
Seals:	EPDM

Flow meter

Body and headwork:	DZR low-lead brass
Bypass valve stem:	stainless steel
Springs:	stainless steel
Seals:	EPDM
Flow meter float and indicator cover:	PSU

NSF/ANSI 372-2011, Drinking Water System Components-Lead Content Reduction of Lead in Drinking Water Act, California Health and Safety Code 116875 S.3874, Reduction in Drinking Water Act, certified by ICC-ES, file PMG-1360.

Performance

Suitable Fluids:	water, glycol solutions
Max. percentage of glycol:	50%
Max. working pressure:	150 psi (10 bar)
Working temperature range:	14–230°F (-10–110°C)
with PEX barb fittings:	14-200° F (0-95° C)
Flow rate range unit of measurement:	½ - 1 ¾ gpm
	2 - 7 gpm
Accuracy:	±10%
Control stem angle of rotation:	90°
Control stem adjustment wrench:	9 mm

Dimensions

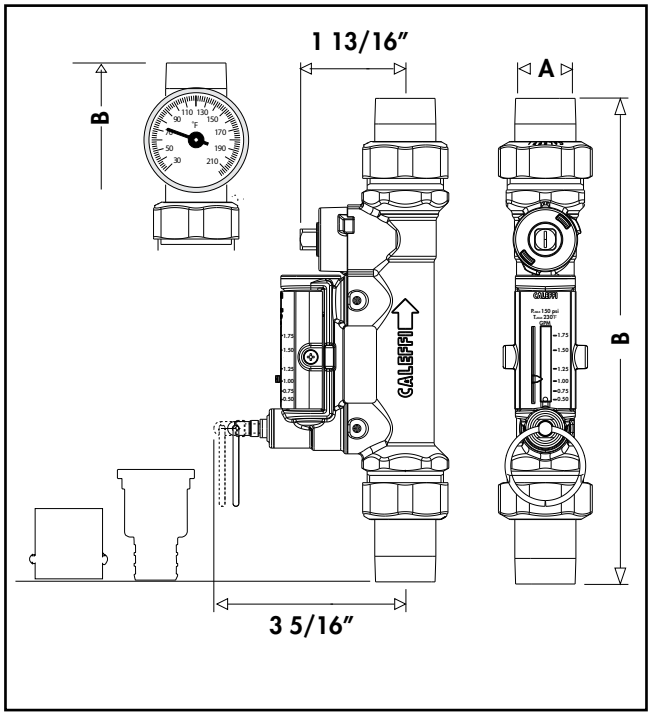

Dimensions

Code	A	B	Flow rate (gpm)	Fully open Cv	Wt (lb)
132434AFC	1/2" PEX barb	9"	½ — 1¾	1.0	1.8
132439AFC	1/2" sweat	8 3/8"	½ — 1¾	1.0	2.0
132534AFC	3/4" PEX barb	10 1/8"	½ — 1¾	1.0	2.0
132536AFC	3/4" press	9 7/8"	½ — 1¾	1.0	1.8
132539AFC	3/4" sweat	8 7/16"	½ — 1¾	1.0	1.8
132634AFC	1" PEX barb	8 11/16"	½ — 1¾	1.0	2.2
132639AFC	1" sweat	8 9/16"	½ — 1¾	1.0	2.4
132454AFC	1/2" PEX barb	9"	2 — 7	6.3	1.8
132459AFC	1/2" sweat	8 3/8"	2 — 7	6.3	2.0
132554AFC	3/4" PEX barb	10 1/8"	2 — 7	6.3	2.0
132556AFC	3/4" press	9 7/8"	2 — 7	6.3	1.8
132559AFC	3/4" sweat	8 7/16"	2 — 7	6.3	1.8
132654AFC	1" PEX barb	8 11/16"	2 — 7	6.3	2.2
132659AFC	1" sweat	8 9/16"	2 — 7	6.3	2.4
132435AFC*	1/2" PEX barb	10 5/16"	½ — 1¾	1.0	2.2
132438AFC*	1/2" sweat	9 11/16"	½ — 1¾	1.0	2.4
132535AFC*	3/4" PEX barb	12 5/8"	½ — 1¾	1.0	2.4
132537AFC*	3/4" press	12 1/8"	½ — 1¾	1.0	2.2
132538AFC*	3/4" sweat	9 13/16"	½ — 1¾	1.0	2.2
132635AFC*	1" PEX barb	10 1/4"	½ — 1¾	1.0	2.6
132638AFC*	1" sweat	10 1/8"	½ — 1¾	1.0	2.6
132455AFC*	1/2" PEX barb	10 5/16"	2 — 7	6.3	2.2
132458AFC*	1/2" sweat	9 11/16"	2 — 7	6.3	2.4
132555AFC*	3/4" PEX barb	12 5/8"	2 — 7	6.3	2.4
132557AFC*	3/4" press	12 1/8"	2 — 7	6.3	2.2
132558AFC*	3/4" sweat	9 13/16"	2 — 7	6.3	2.2
132655AFC*	1" PEX barb	10 1/4"	2 — 7	6.3	2.6
132658AFC*	1" sweat	10 1/8"	2 — 7	6.3	2.8

*with temperature gauge.

Flow meter

When activated by pulling the operating ring (2), the flow rate is indicated on the flow meter housed in a bypass circuit on the valve body. When finished reading the flow rate, the flow meter is shut off when the pull-ring (2) is released, isolating it during normal operation. Use of a flow meter greatly simplifies the process of system balancing since the flow rate can be measured and adjusted at any time without differential pressure gauges or reference charts. The onboard flow meter eliminates the need to calculate valve settings during system setup. Additionally, the unique onboard flow meter offers time and cost savings by eliminating the involved procedure of calculating pre-settings associated with using traditional balancing devices.

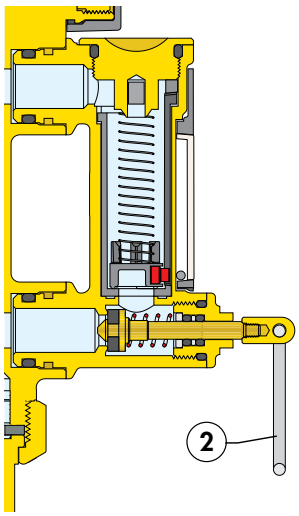

Operating principle

The control mechanism is a stainless ball orifice (1), connected to a control stem (2). As the stem is rotated, the target flow rate is reached by aid of a convenient onboard flow meter (3) housed in a bypass circuit on the valve body. The circuit is automatically shut off during normal operation. The flow is indicated by a metal ball (4) sliding inside a transparent channel (5) with an integral gpm scale (6).

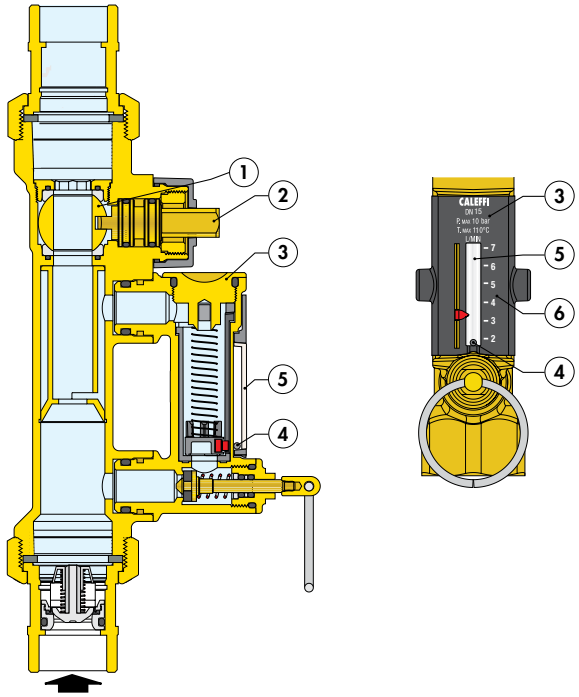

Flow meter bypass valve

The bypass valve (1) opens and closes the circuit between the flow meter and the valve. The bypass valve is opened by pulling the operating ring (2), and is automatically closed by the internal return spring (3) when finished reading the flow rate. The spring and the EPDM seal (4) provide a reliable seal to isolate the flow meter during normal operation.

The operating ring (2) material has low thermal conductivity to protect the finger if the flow meter is opened while hot fluid is passing through the valve.

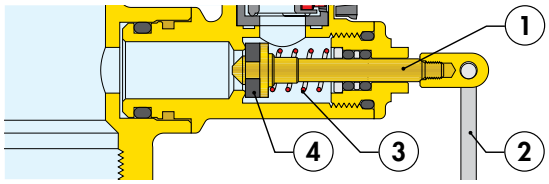

Ball/magnet indicator

The metal ball (4) that indicates the flow rate is not in direct contact with the fluid passing through the flow meter.

This is an innovative measuring system in which the ball slides up and down inside a transparent channel (5) that is isolated from the fluid flowing through the body of the flow meter. The ball is moved by a magnet (6) connected to a float (7). In this way the flow rate indication system **remains perfectly clean and provides reliable readings over time**.

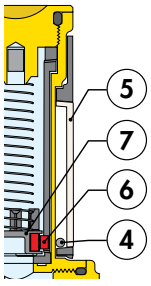

FlowCal+™ Low-lead compact dynamic flow balancing valve

127 series

Function

The FlowCal+™ compact dynamic flow balancing valve is pressure independent and maintains a fixed flow rate as differential pressures vary. It incorporates an exclusive flow cartridge, made of an anti-scale, low noise polymer. Constructed of DZR low-lead brass, FlowCal+™ is ideally suited for use in plumbing applications such as hot water recirculation systems. The built-in check valve protects against circuit thermo-siphoning. The outlet temperature gauge (optional) verifies the fluid temperature in the circuit. The FloCal+™ can also be used in hydronic systems.

Product range

127 series FlowCal+ compact dynamic automatic balancing valve, with polymer cartridge, includes check valve, optional outlet temperature gauge.....union connections ½", ¾", 1" npt male, sweat, PEX barb or ¾" press

Technical specifications

Materials

Body:	DZR low-lead brass
Flow cartridge:	anti-scale polymer
Spring:	stainless steel
Seals:	EPDM

Performance

Medium:	water, glycol solutions
Max. percentage of glycol:	50%
Max. working pressure:	230 psi (16 bar)
with PEX barb fittings:	200 psi (14 bar)
Working temperature range:	32-212° F (0-100° C)
with PEX barb fittings:	32-200° F (0-95° C)
Max. working temperature:	212° F (100° C)
with PEX barb fittings:	200° F (95° C)
Connections:	1/2", 3/4"and 1" sweat, PEX barb or ¾" press union
Lay length (press connection):	size ¾ inch without gauge: 4 7/16"
	size ¾ inch with gauge: 6 11/16"
Flow rate:	18 fixed flow rate settings ranging from 0.25 - 10 GPM
Flow accuracy:	±10%
Differential pressure control ranges:	2-14, 2-32, 4-34, 5-35 psid

NSF/ANSI 372-2011, Drinking Water System Components-Lead Content Reduction of Lead in Drinking Water Act, California Health and Safety Code 116875 S.3874, Reduction in Drinking Water Act, certified by ICC-ES, file PMG-1360.

Dimensions

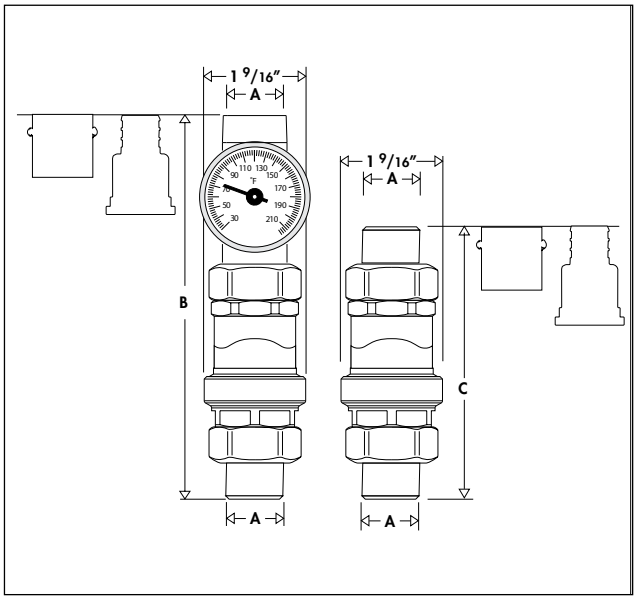

Code	A	B (w/ Gauge)	C (w/o Gauge)	Wt (lb) B/C
127141AFC ...	1/2" npt male	7 1/8"	4 7/8"	1.6/1.2
127144AFC ...	1/2" PEX barb	7 3/4"	5 1/2"	1.4/1.0
127149AFC ...	1/2" sweat	7 1/8"	4 7/8"	1.4/1.0
127151AFC ...	3/4" npt male	7 5/16"	5 11/16"	1.5/1.1
127154AFC ...	3/4" PEX barb	8 1/16"	5 13/16"	1.5/1.1
127156AFC ...	3/4" press	9 5/16"	7 1/16"	1.5/1.1
127159AFC ...	3/4" sweat	7 9/16"	5 5/16"	1.5/1.1
127161AFC ...	1" npt male	8 1/16"	5 13/16"	1.9/1.5
127164AFC ...	1" PEX barb	8 11/16"	6 7/16"	1.7/1.3
127169AFC ...	1" sweat	8 9/16"	6 5/16"	1.7/1.3

Operating principle

The FlowCal+™ flow cartridge is composed of a cylinder, a spring-loaded piston, and a combination of fixed and variable geometric orifices through which the fluid flows. These variable orifice sizes increase or decrease by the piston movement, contingent on the system's fluid thrust. A specially calibrated spring counteracts this movement to regulate the amount of fluid that will pass through the valve orifices, maintaining a constant flow rate in the circuit.

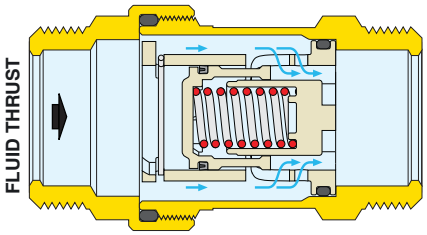

System operation

If the differential pressure is within the control range, the spring-loaded piston is positioned to flow at the nominal rate for which the FlowCal+™ is set up.

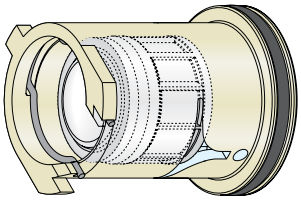

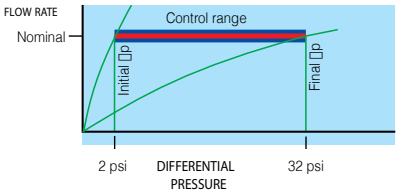

Construction details

Polymer flow cartridge

The flow rate cartridge is made of an anti-scale polymer, specially engineered for use in domestic water, cooling and heating systems, to prevent mineral buildup. The polymer material is excellent in a wide range of working temperatures.

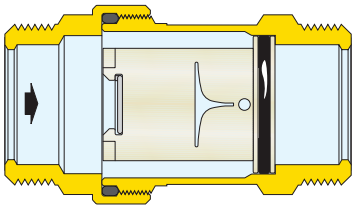

Exclusive design

The flow cartridge is exclusively designed to accurately control the flow rate in a wide range of operating pressures. A special internal chamber acts as a damper for the vibrations occuring with fluid flow, reducing the possibility of noise.

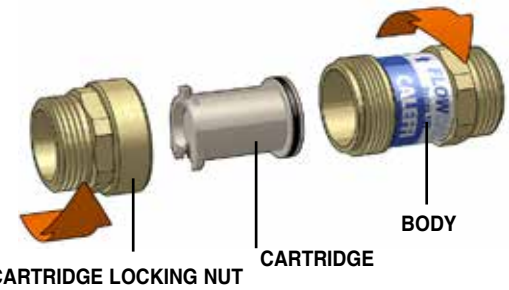

Ordering information for FlowCal+™ 127 series

Select the appropriate valve for your application from the dimension table on previous page. Then select the desired flow rate from the table below. When ordering, combine the appropriate code number from both tables including the 3 digits from table below. Example: 127144AFC **G50**.

GPM	Last 3 digits of code no. (...)	Pressure differential control range (psid)
0.25	G25	2 - 14
0.35	G35	
0.5	G50	
0.75	G75	
1	1G0	2 - 32
1.5	1G5	
2	2G0	
2.5	2G5	
3	3G0	

GPM	Last 3 digits of code no. (...)	Pressure differential control range (psid)
3.5	3G5	2 - 32
4	4G0	
4.5	4G5	
5	5G0	
6	5G0	4 - 34
7	7G0	
8	8G0	
9	9G0	5 - 35
10	10G	

Code	Size	Flow rate (gpm)																
12714xAFC ...	1/2 inch	0.25	0.35	0.5	0.75	1.00	1.50	2.00	2.50	3.00	3.50	4.00	4.50	5.00	6.00	7.00	8.00	9.00	10.00
12715xAFC ...	3/4 inch	0.25	0.35	0.5	0.75	1.00	1.50	2.00	2.50	3.00	3.50	4.00	4.50	5.00	6.00	7.00	8.00	9.00	10.00
12716xAFC ...	1 inch	0.25	0.35	0.5	0.75	1.00	1.50	2.00	2.50	3.00	3.50	4.00	4.50	5.00	6.00	7.00	8.00	9.00	10.00
*Δp range (psid)		2 - 14				2 - 32									4 - 34			5 - 35	

*Minimum differential pressure required

MixCal™ Adjustable three-way thermostatic mixing valve

521 series

Function

The Caleffi MixCal™ 521 series three-way thermostatic mixing valve is used in systems producing domestic hot water or in hydronic and radiant heating systems. It maintains the desired output temperature of the mixed water supplied at a constant set value compensating for both temperature and pressure fluctuations of the incoming hot and cold water. The MixCal™ is precision engineered with fine machine threads and double o-ring seals for smooth temperature adjustment and has a large easy-grip adjustment knob.

Certified to ASSE 1017 and Low Lead Plumbing Law by ICC-ES.

ASSE 1017

Product range

521___A series	Adjustable three-way thermostatic mixing valve.....connections ½", ¾", 1" NPT male union, sweat union and press union
521___AC series	Adjustable three-way thermostatic mixing valve with inlet port check valves.....connections ½", ¾", 1" NPT male union, sweat union
521506AC, 521516AC	Adjustable three-way thermostatic mixing valve with inlet port check valves.....connections ¾" press union
521101A	Adjustable three-way thermostatic mixing valve, (replacement body).....connections 1" male union thread with no fittings or union nuts

Technical specifications

Materials

- Body:	low-lead brass (<0.25% Lead content)
- Shutter, seats and slide guides:	PPO
- Springs:	stainless steel
- Seals:	Peroxide-cured EPDM

Performance

Suitable fluids:	water, glycol solution
Max. percentage of glycol:	30%
Setting range:	85–150° F (30–65° C)
Tolerance:	±3° F (±2° C)
Max. working pressure:	200 psi (14 bar)
Max. operating differential pressure:	75 psi (5 bar)
Max recommended differential pressure:	20 psi (1.5 bar)
Max. hot water inlet temperature:	200° F (93° C)
Max. inlet pressure ratio (H/C or C/H) for optimum performance:	2:1
Minimum temperature difference between hot water inlet and mixed water outlet for optimal performance:	27° F (15° C)
Minimum flow to ensure optimal performance:	1.0 gpm (3.8 L/min)
Minimum flow rate when recirculation flow rate is 1 gpm or greater:	0 gpm (0 L/min)

Certifications

1. ASSE 1017/CSA B125.3, certified by ICC-ES, file PMG-1357.
2. NSF/ANSI 372-2011, Drinking Water System Components-Lead Content Reduction of Lead in Drinking Water Act, California Health and Safety Code 116875 S.3874, Reduction of Lead in Drinking Water Act, certified by ICC-ES, file PMG-1360.

Connections

- NPT male union:	½", ¾", 1"
- sweat union:	½", ¾", 1"
- press union:	½", ¾", 1"
- PEX barb:	½", ¾", 1"
- lay length-hot to cold inlet (press connections):	
size ½ inch:	3 5/8"
size ¾ inch:	3 5/8"
size 1 inch:	4 1/8"

Connection options include Sweat, MNPT, Press and PEX barb

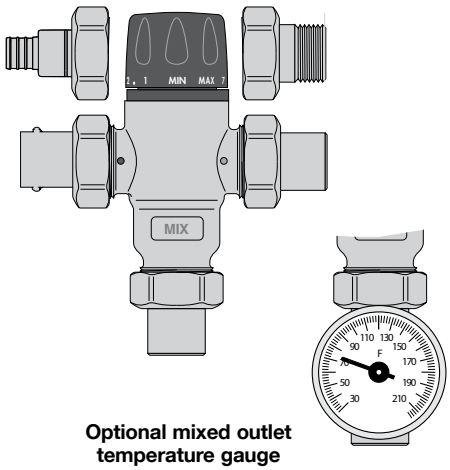

Optional mixed outlet temperature gauge

Operating principle

The controlling element of the three-way thermostatic mixing valve is a thermostatic sensor fully immersed in the mixed water outlet tube which, as it expands or contracts, continuously establishes the correct proportion of hot and cold water entering the valve. The regulation of these flows is by means of a piston sliding in a cylinder between the hot and cold water passages. Even when there are pressure drops due to the drawing off of hot or cold water for other uses, or variations in the incoming temperature, the thermostatic mixing valve automatically regulates the water flow to obtain the required temperature.

Flow curve

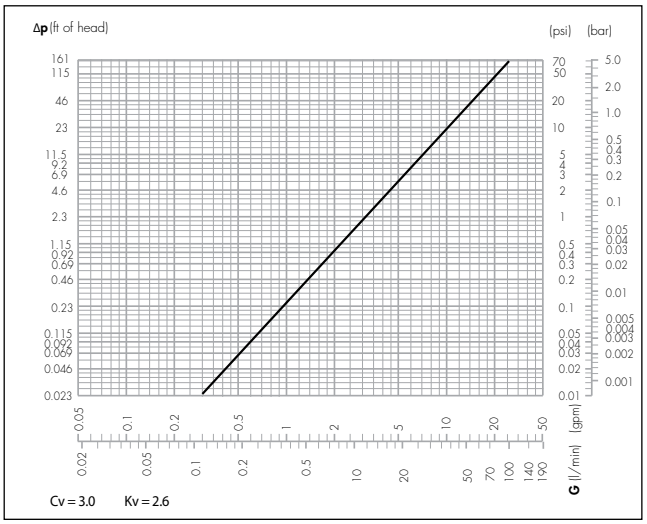

Installation

Before installing a Caleffi MixCal™ 521 series three-way thermostatic mixing valve, the system must be inspected to ensure that its operating conditions are within the range of the mixing valve, checking, for example, the supply temperature, supply pressure, etc.

Systems where the 521 series thermostatic mixing valve will be installed must be drained and cleaned out to remove any dirt or debris which may have accumulated during installation.

The installation of appropriately sized filters at the inlet from the main water supply is always advisable.

Caleffi MixCal™ 521 series thermostatic mixing valves must be installed by qualified personnel, taking into account all current applicable standards.

Caleffi MixCal™ 521 series thermostatic mixing valves can be installed in any position, either vertical or horizontal, or upside down.

The following are shown on the thermostatic mixing valve body:
- Hot water inlet, color red and marked “HOT”.
- Cold water inlet, color blue and marked “COLD”.
- Mixed water outlet, marked “MIX”.

Check valves

In order to prevent undesirable backsiphonage, check valves should be installed in systems with thermostatic mixing valves. As a convenience for easier installations, the Caleffi MixCal™ 521 “AC” series thermostatic mixing valves include integral check valves in the hot and cold inlet ports.

Temperature adjustment

The temperature is set to the required value by means of the knob with the graduated scale, on the top of the valve.

Pos.	Min.	1	2	3	4	5	6	7	Max.
T (°F)	81	90	100	111	120	127	136	145	152
T (°C)	27	32	38	44	49	53	58	63	67

with: T_{HOT} = 155°F (68°C), with: T_{cold} = 55°F (13°C), P = 43 psi (13 bar)

Construction details

Anti-scale materials

The material used in the construction of the Caleffi MixCal™ 521 series thermostatic mixing valve reduces jamming caused by lime deposits. All the working parts such as shutter, seats and slide guides are made of a special anti-scale material, with a low friction coefficient, assuring long term performance.

Large mixing chamber and thermostatic cartridge:
This enables precise mixed temperature stability during inlet temperature and pressure variations.

Tamper-proof adjustment setting lock:
This prevents tampering of the mixed water temperature setpoint.

Peroxide-cured seals:
Enables the MixCal™ to withstand treated water, chlorine and chloramines.

Inlet filters:
Protects internal components.

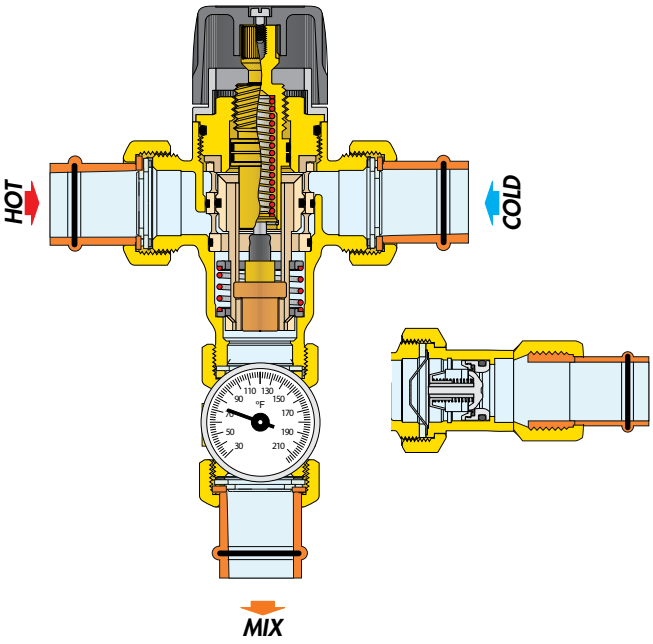

Locking the setting

Position the handle to the number required with respect to the index point. Unscrew the head screw, pull off the handle and reposition it so that the handle fits into the internal slot of the knob. Tighten the head screw.

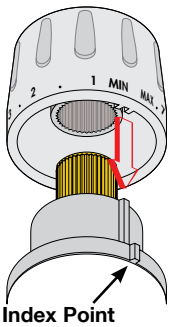

535H PRESSURE REDUCING VALVE

- Pressure pre-adjustment knob with convenient front & back psi indicator. 15 to 95 psi adjustment range.
- Removable cartridge with stainless steel mesh filter. Easy in-pipe servicing.
- Unique seat & shuttle seal design minimizes turbulence and noise.
- Contour-shaped EPDM diaphragm withstands sudden pressure fluctuations – a common cause of premature wear.
- Scale resistant internal parts minimize lime-scale formation – a common cause of flow inconsistencies.
- Hot water booster system compatible - 300 psi and 180 °F rated. Certified to ASSE 1003, NSF 61, NSF 372, CSA B356.
- Dual union connections (NPT, press, sweat, or pex barb), lockable adjustment knob, and optional pressure gauge.

Controlling and protecting your water

Plumbing

www.caleffi.com - Milwaukee, WI USA

CALEFFI
Hydronic Solutions